COLLECTIONS BOOK

Catalogue.

KENDO

2025

kendo

KENDO			04
DESIGNERS			06
TYPOLOGIES			08
RAK	New	Tables, benches, stools, desk, console table	16
STELLA	New	High tables, coffee tables	72
ZAO	New	Armchair	110
FARO | MOS	New	Coffee tables	126
ZANCO	New	Side and bedside table	144
TREVISO	New	Coffee tables	156
SLOT	New	Coffee tables, side tables	176
UNE	New	Side table	198
TOC		Coffee tables, side and bedside tables	206
DUO		Coffee tables, side and bedside tables	224
PORCIONES		Coffee table	254
EXO		Coffee tables, TV Furniture, console tables	280
EXO ROUND		Coffee tables	310
REFLEX		Coffee tables, side and bedside tables	330
IDRA		Coffee tables, side and bedside tables	348
TOTEM		TV Furniture	374
RITA		Coffee tables, console table, desk, bookcase	392
RITA LITE		Coffe tables, side tables, sofa console	424
NARUK		Console table, desk	442
BECO		Desk	460
GREY		Console table	476
VAN		Coffee table, side table	490
LOTTA		Coffee table, side and bedside table	506
TRAZO		Coffee tables	528
YOHSI		Coffee tables	542
TEMPS		Coffee tables	568
PLAT		Coffee tables	584
VILLA		Coffee tables, side and bedside tables	600
CLIK | CLIK LITE		Coffee tables, side and bedside tables	622
VERA		Coffee table	644
MARÍA		Coffee table	658
ANT | ANT LITE		Coffee tables	676
AXIL		Console table	696
MIKA		Coffee table, side table	708
TRIA		Side and bedside table	726

Our story began in Valencia in 2000, driven by the illusion of creating unique, handcrafted and timeless furniture. Since then, we have travelled a path in which design and craftsmanship have intertwined to give shape to a company committed to quality, sustainability and functional beauty.

Each piece we create is born from the desire to connect with the deepest emotions, to integrate naturally into spaces and enrich them with its presence. They are creations that go beyond aesthetics: they combine functionality, character and an identity of their own capable of transforming the everyday into an emotional experience.

We work with expert hands that master artisanal techniques and understand that authentic design requires time, dedication and precision. Every wood grain, every texture, every joint is a testament to our commitment to quality, durability and handmade beauty.

We believe in the power of honesty, of what is made with care and respect for materials and the environment. That is why we choose noble, sustainable and carefully treated materials, which allow us to give life to unique furniture, designed to last and accompany stories over time.

We design furniture that tells stories, that accompanies moments and that ages with elegance. We are committed to responsible production, backed by certifications such as ISO 9001, ISO 14001, FSC® and PEFC, which reflect our commitment to the environment and to a more balanced future.

For us, design is a bridge between people and spaces. That's why we listen, understand and work with each client, building relationships based on trust and a shared vision. More than two decades later, we continue to move forward with the same passion as on the first day, guided by the conviction that each piece of furniture can be much more than an object.

We have a team of designers that ranges from iconic figures like Miguel Milá, a benchmark in Spanish design, to young talents with a solid track record and a deep dedication to their craft. This blend of experience, heritage, and contemporary perspective allows us to create unique pieces that balance functionality, aesthetics, and emotion.

Each piece of furniture is born from a respect for materials, artisanal tradition, and a commitment to offering timeless designs that reflect the people who use them and the spaces they inhabit.

TABLES

COLLECTIONS

ANT

ANT LITE

CLIK

CLIK LITE

DUO

EXO

EXO ROUND

FARO

IDRA

LOTTA

MARÍA

MIKA

MOS

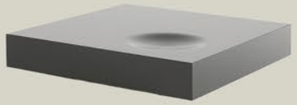

PLAT

PORCIONES

RAK

REFLEX

RITA

RITA LITE

SLOT

SLOT ROUND

STELLA

TEMPS

TOC

TABLES

COLLECTIONS

TRAZO

TREVISO

TRIA

UNE

VAN

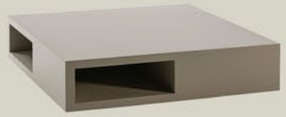

VERA

VILLA

YOHSI

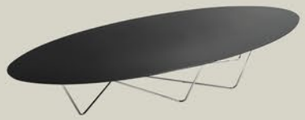

YOHSI ELÍPTICA

ZANCO

HIGH TABLES

RAK

RAK BISTRO

COLLECTIONS

RAK BISTRO

STELLA

SEATS

RAK BENCH

RAK STOOL

ZAO ARMCHAIR

CONSOLE TABLES

AXIL

EXO

GREY

NARUK

RAK

RITA

DESKS

BECO

NARUK

RAK

RITA

OCCASIONAL ACCESORIES | TV SUPPORTS

EXO

RITA

RITA LITE

TOTEM

SLOT COLLECTION

HOW SLOT IS BORN

Slot is born from the intersection of horizontal and vertical planes which are combined with one another creating a versatile collection of square, rectangular and round wooden tables.

THE RICHNESS OF ASH

Slot tables are made out of MDF boards veneered in ash wood. The geometric simplicity is complemented with the rich texture of the wood. The table can be finished in several colours of ash: natural, grey, toasted, black, green, or blue. As for the round tables, their top is also available in white, black or travertine marble.

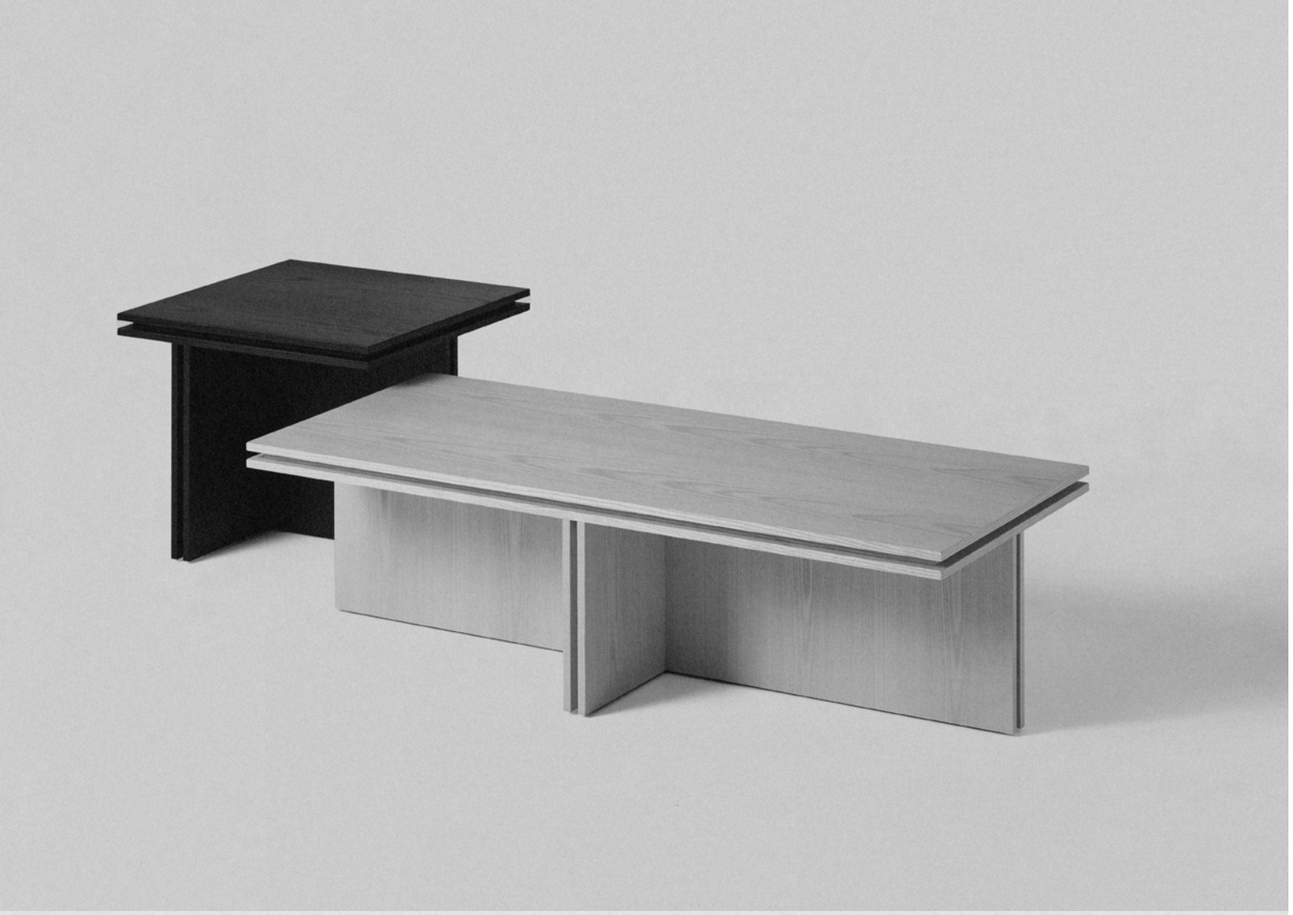

ALONE OR TOGETHER

Although the tables work individually, a distinctive aspect of the collection is that the heights and shapes are conceived to allow the possibility to overlay the tables with each other, forming various sets.

Slot

Slot round

This disposition leaves free space to accomodate another measure of the collection. The second characteristic is the height difference between the tables, designed so that, when forming sets, the space is perfect to create a dialogue between the tables. Square and rectangular tables come in 32 and 40 centimeter heights. Round tables have heigths of 32 and 42 centimeters. Thanks to its versatility, Slot is suitable to any space, acting in sets or individually as a bedside, side or coffee table.

Slot concept

Coffee table

SLOT-88

Ash ash

New collection. Slot 2025

Slot stands for a simple and refined design, marked by the double line detail on the edges, which creates a very special relationship between legs and top. This double line is created by superposing three boards on the top as well as the legs. The central board is withdrawn two centimetres from the edge. This creates the distinctive slot that gives name to this collection.

Coffee table **SLOT-25** **SLOT-88** **Ash ash**

Slot round concept

Coffee table

SLOT-55

Black marble | Black ash

New collection. Slot round 2025

01	SLOTR-00	Natural ash
02	SLOTR-55	Black marble, black ash
03	SLOTR-22	Ash ash

Explore this captivating collection of meticulously handcrafted tables. Designed with a keen eye for simplicity, elegance, and minimalism, each piece holds the perfect balance between aesthetic appeal and practical functionality.

Coffee table SLOT-00 Natural ash

The interesting, natural textures of ash wood and marble accentuate the tables' beauty, creating an ambiance of warmth and sophistication. Elevate your space with these tables, where form meets function in a celebration of enduring style.

SLOT ROUND

SLOT

THE WHOLE FAMILY

SLOT

The collection is composed by seven measures, four of them with a rectangular top, and three with a rounded top. Six ash finishings are offered, plus marble for the top on the round tables.

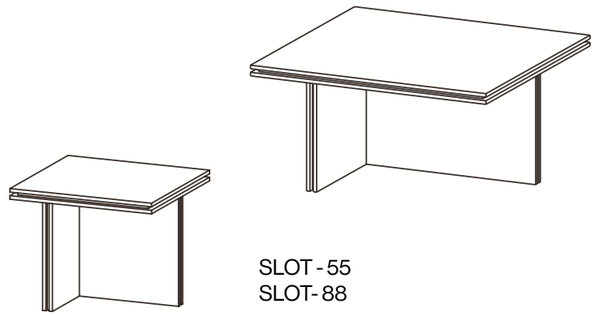

SLOT - 55
SLOT- 88

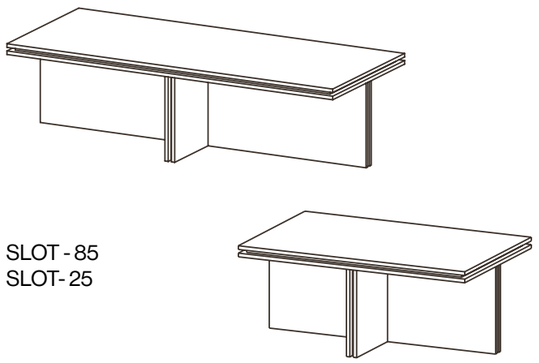

SLOT - 85
SLOT- 25

SLOT ROUND

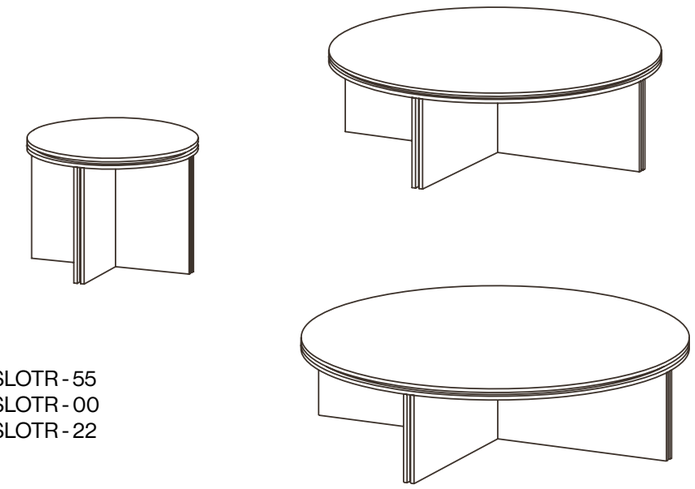

SLOTR - 55
SLOTR - 00
SLOTR - 22

SLOT-55

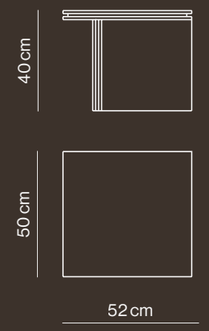

SLOT-88

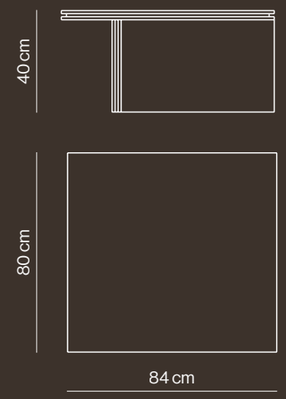

SLOT-85

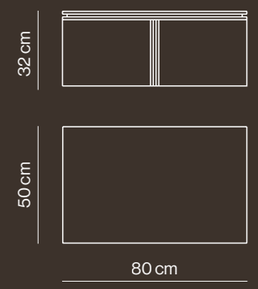

SLOT-25

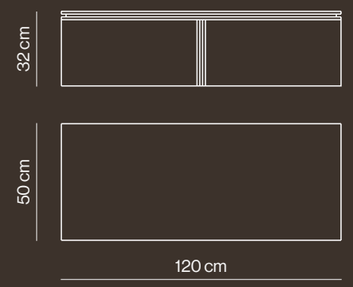

SLOTR-55

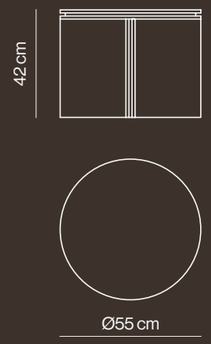

SLOTR-00

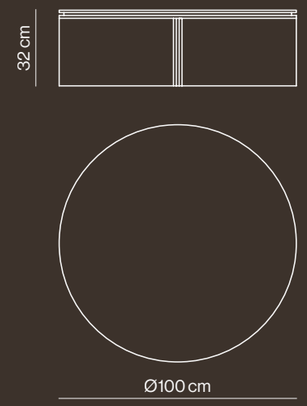

SLOTR-22

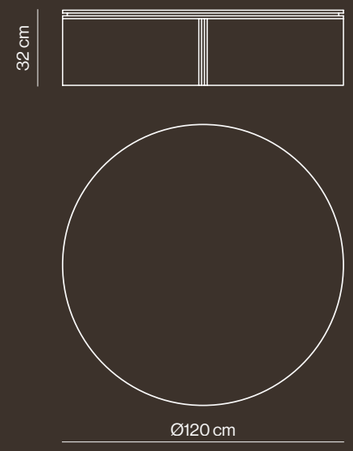

UNE COLLECTION

UNE CONCEPT

Une collection has a minimalistic and clean design. The table is composed by supporting the top on a thin column. At the bottom, a wide base gives stability to the whole. Its low weight —less than 10 kilograms— makes it possible to move the table easily near to an armchair or sofa. This way it provides a surface on which to place all kinds of small objects, from a decorative element to a laptop. Une acts as a perfect companion, adapting to the necessities of any given moment.

A PERFECT COMPANION

Une occasional table combines functionality with elegance in a proposal composed by a top of rounded, kind shapes, made in lacquer or veneer, and a slim metallic structure. Through its soft and sleek shapes, Une table appeals to naturalness and honesty. Dispite the clear intention of being a functional and comfortable piece for everyday use, the table's design doesn't dismiss the aesthetics thanks to its delicate, carefully defined proportions.

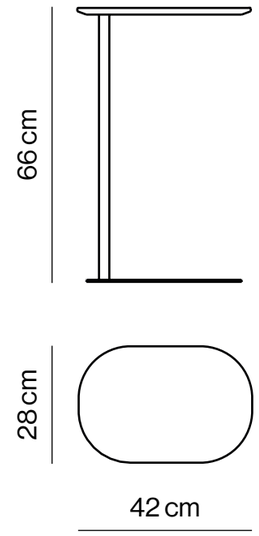

Une table is composed of a top and a structure. The available finishes for the top are different colours of lacquer, and oak and ash veneer. The structure is metallic and it can be thermolacquered in six colours with a microtextured finish.

TOC COLLECTION

Toc collection bears the hallmark of Francesc Rifé Studio. It stands out for its minimalist influence, respect for craftsmanship and a geometric proportion that defines its identity. They are small tables with their own personality that bring the necessary warmth to any space.

TOC TABLE Ø45x52 cm White marble | Ash oak

The mix of materials traces the personality of this new collection of warm-feeling tables. From a T-shaped base, each one of the pieces rises up, whose combination of noble materials such as marble, wood and lacquer, will finally define its identity. The designs are available in three sizes. All three work well together in center spaces as well as alone in any corner of the room.

Toc Ø55x46 cm and Toc Ø65x40 cm in sand lacquer.

The collection is personality and warmth, which is why it adapts to all types of environments. It includes the typology of bedside tables offering a unique character combined with maximum functionality.

Left to right, Toc Ø55x46 cm in black marble and lacquer, Toc Ø45x52 cm in fir green lacquer, Toc Ø65x40 cm in white marble and ash oak.

Casa Cuberta - Francesc Rifé Studio. Barcelona, Spain.

Toc Ø45x52 cm in black marble and lacquer.

Toc is synonymous with originality and elegance. The combination of planes in its structure as well as its circular top give it a formal and versatile style that allows it to adapt to a wide variety of spaces and rooms, always providing a handcrafted essence.

TOC-45

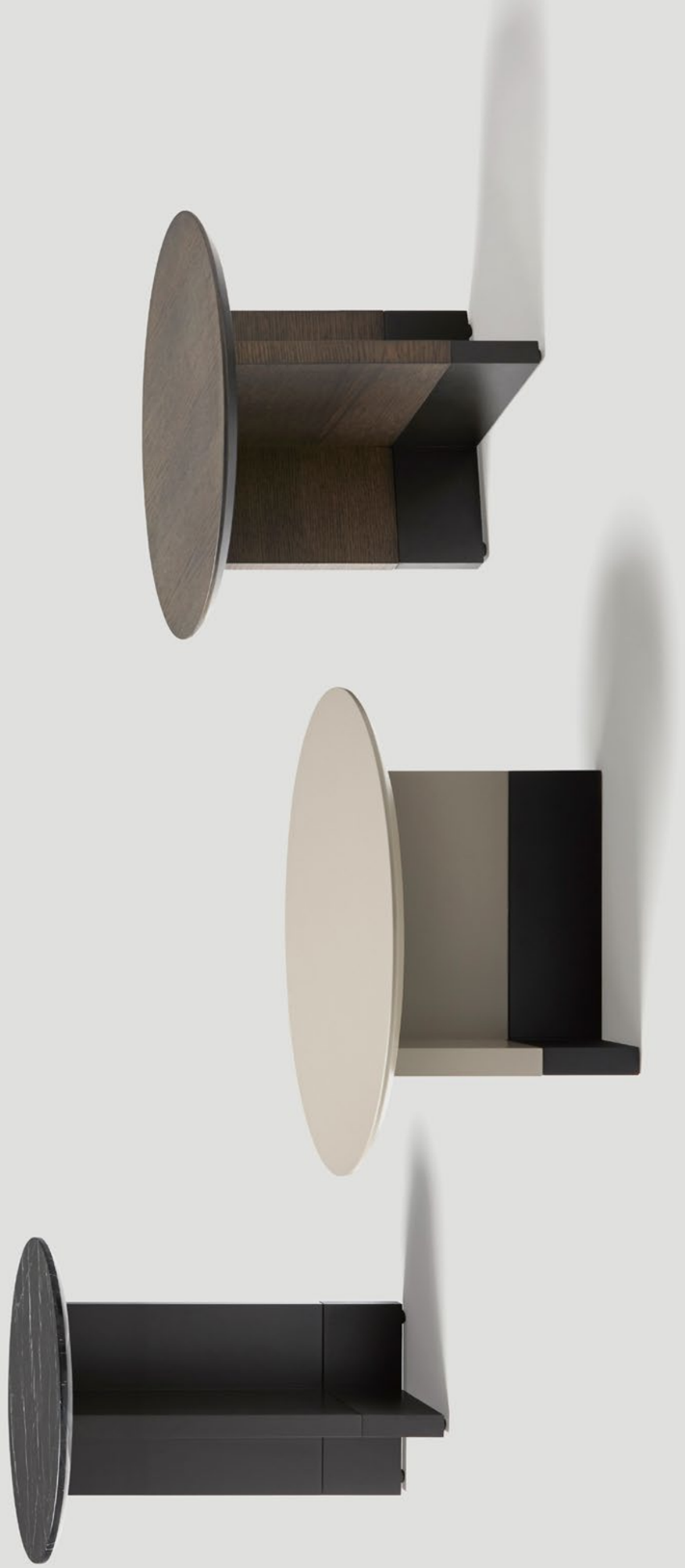

On the left page, Toc Ø45x52 cm in white marble and ash oak. On the right, Toc Ø45x52 cm in black marble and lacquer, Toc Ø65x40 cm in stone lacquer and Toc Ø55x46cm in ash oak.

Available in a wide variety of finishes and sizes, the Toc collection allows total customisation to suit the needs of the user and offers alternatives and possibilities to make your environment a space of integral design.

TOC-45

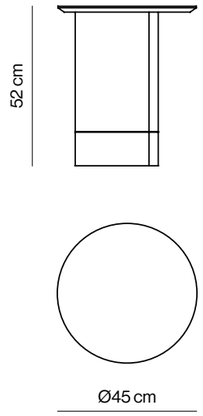

TOC-54

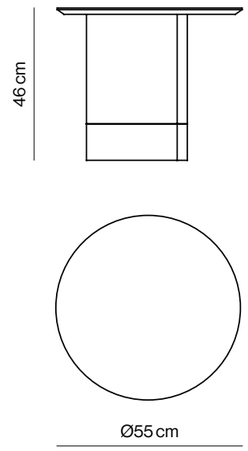

TOC-64

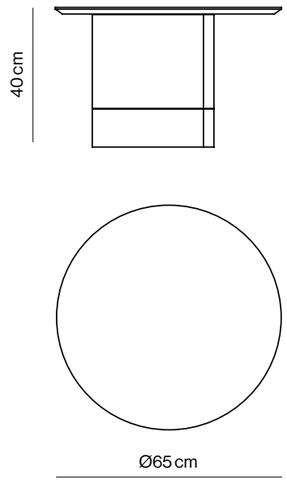

DUO COLLECTION

Duo concept

Duo collection designed by PerezOchando was born from the ambition to create a piece that is visually light and, at the same time, functional. The PerezOchando studio is known for playing with interesting shapes in its designs, and the inspiration for this collection, based on the figure of the Japanese hashi chopsticks, leaves no one indifferent. It is a design with a balance between elegant and delicate.

DUO TABLE Ø45x50 cm White marble | Black metal

DUO TABLE Ø70x45 cm Black marble | Black metal

Duo table is the perfect example of the sustainable and responsible design that we at Kendo have always taken care of. Sensitivity from the very beginning of its creation, the table has always had its own adaptability, personality and formality.

Left to right, Duo table Ø55x50 cm in white marble, Duo table Ø70x45 cm in black marble and Duo table Ø45x50 cm in fir lacquer.

Duo adapts easily to any environment, both in the home and in contract projects. The top is available in various finishes, lacquer, oak, walnut, black glass, statuary ceramic and marble, to adapt to any space.

Casa Tide - in56. Vizcaya, Spain.

On this page, Duo table Ø55x50 cm with travertine marble top and Duo table 100x100x40 cm with ash oak top.

DUO TABLE Ø55x50 cm Travertine marble | Taupe metal

The collection offers a wide range of possibilities working individually and together. Duo allows numerous customisation options thanks to its wide variety of finishes.

Duo Ø100x40 cm in travertine marble and brown metal.

On the left, Duo Ø55x50 cm in white marble and black metal, and Duo Ø70x45 cm in fog lacquer and black metal. On the right, Duo Ø55x50 cm in ash oak and black metal.

FPOGRAPHY 9

DUO TABLE

Ø45x50 cm

Black marble | Black metal

On this page, Duo table Ø45x50 cm in sand lacquer and black metal.

DUO-74R

DUO-04R

DUO-45R

DUO-45R

DUO-00

DUO-55R

DUO-04R

DUO-74R

DUO-24R

DUO-45R

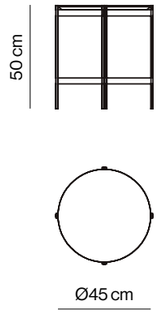

DUO-55R

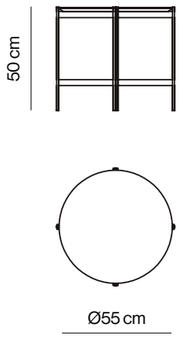

DUO-74R

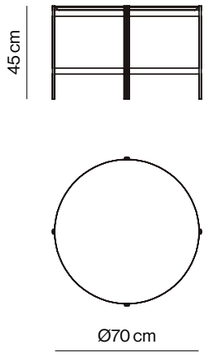

The wide variety of finishes on the top allows for numerous unique configurations that offer all kinds of variations in order to adapt perfectly to any type of space, including hotels, residential, offices, restaurants etc.

The visual play offered by its legs, as well as its great versatility as a whole or on its own, make it a piece of industrial design destined to become an aesthetic icon of timelessness.

DUO-04R

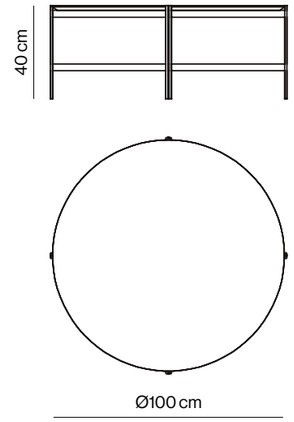

DUO-00

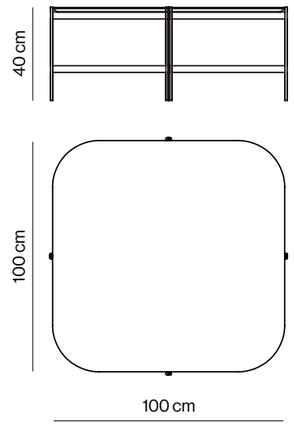

DUO-24R

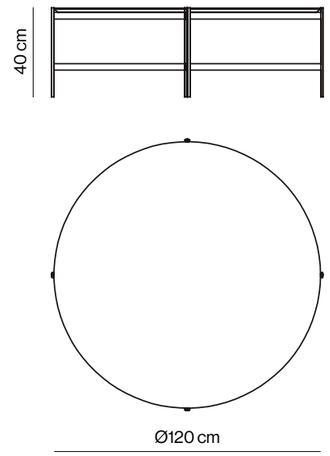

PORCIONES COLLECTION

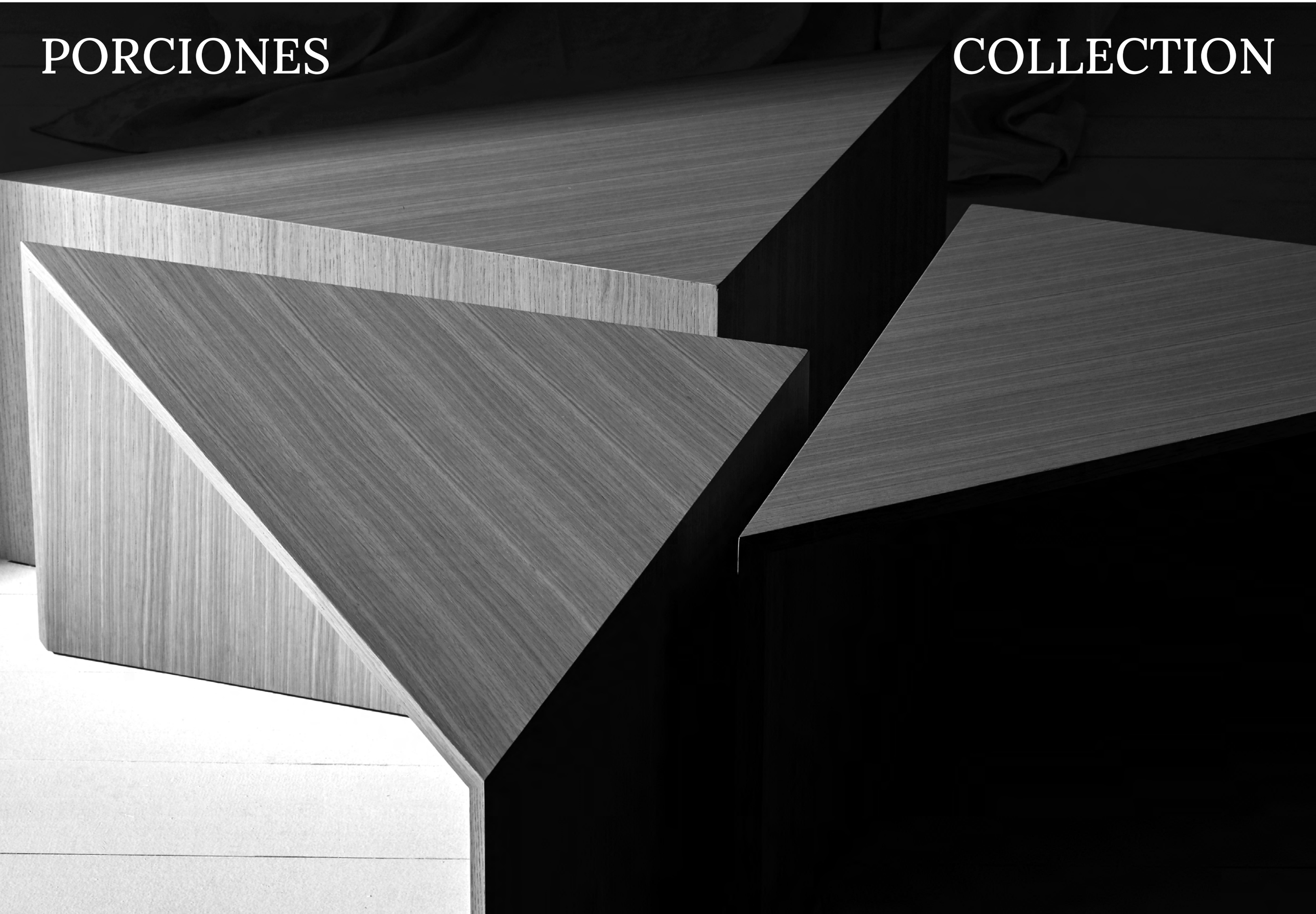

Miguel Milá, a great reference in Spanish industrial design, collaborated with us in the re-edition of Porciones. A table made up of four triangular pieces, which can be used together or separately to achieve multiple compositions. Noble materials, craftsmanship and detail in each process, is the summary of his impeccable timeless design that marks an unequalled trajectory.

On this page, Porciones coffee table composed of four modules in ash oak.

The option of creating customised sets with noble materials makes it possible to easily adapt to the needs of any environment, whether in the home or in contract projects.

On these pages, different combinations of Porciones in natural oak.

On these pages, different combinations of Porciones table in ash oak, taupe lacquer, and natural oak.

Porciones is a piece created entirely through a handcrafted process that takes into account the quality of the materials and finishes.

On the left page, Porciones coffee table composed of two modules in taupe lacquer and Porciones auxiliary complement composed of three modules in ash oak.

Porciones coffee table composed of one module in ash oak and Porciones auxiliary complement composed of three modules in ash oak.

Miguel Milá, (pre)industrial designer - Gonzalo Milá and Claudia Oliva. Madrid, Spain.

On this page, Porciones coffee table composed of two modules in ash oak finish next to a coffee table composed of four modules in graphite finish.

It is a timeless design, endowed with excellent proportions that create unique and personal spaces thanks to the multiple combinations of its pieces and its different finishes.

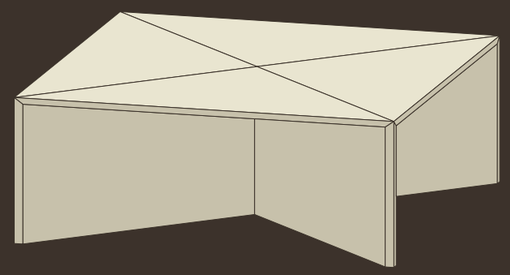

Porciones coffee table composed of four modules.

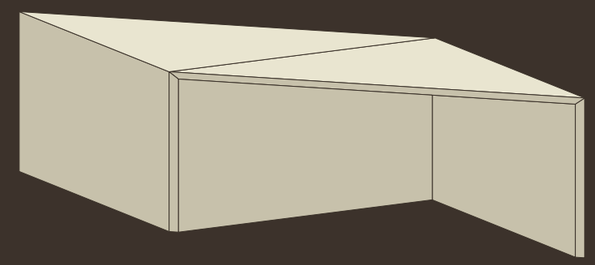

Porciones coffee table composed of two modules.

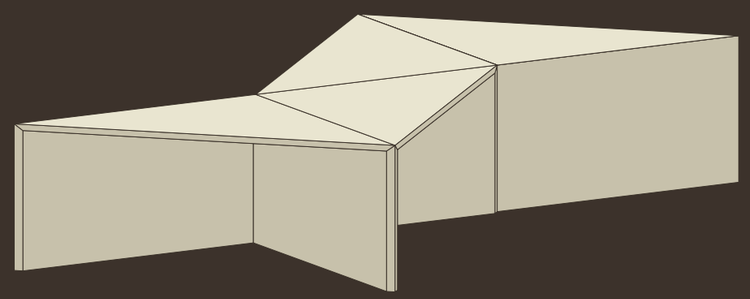

Porciones coffee table composed of four modules.

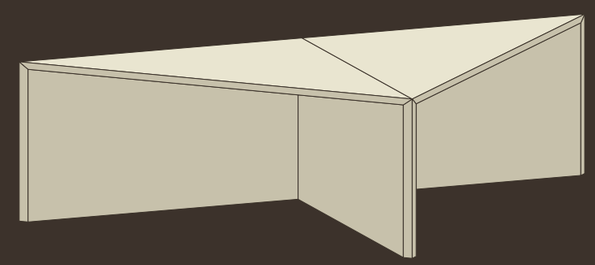

Porciones coffee table composed of two modules.

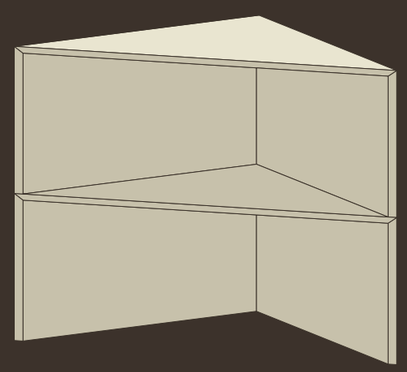

Porciones bookcase composed of two modules.

And more combiations...

It is a variable and flexible table that can be a large table or four small ones. It gives play to varied compositions and allows different uses. Its original design makes iteasy to adapt to any space.

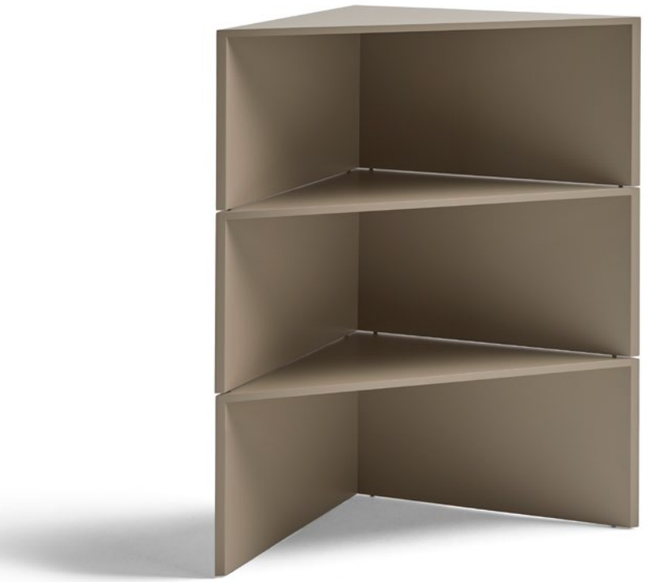

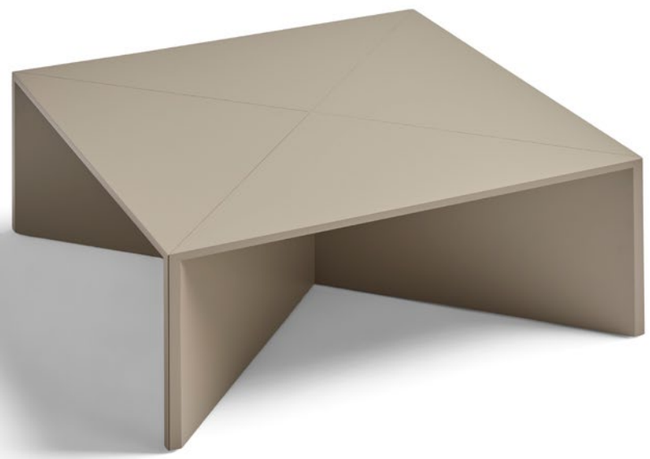

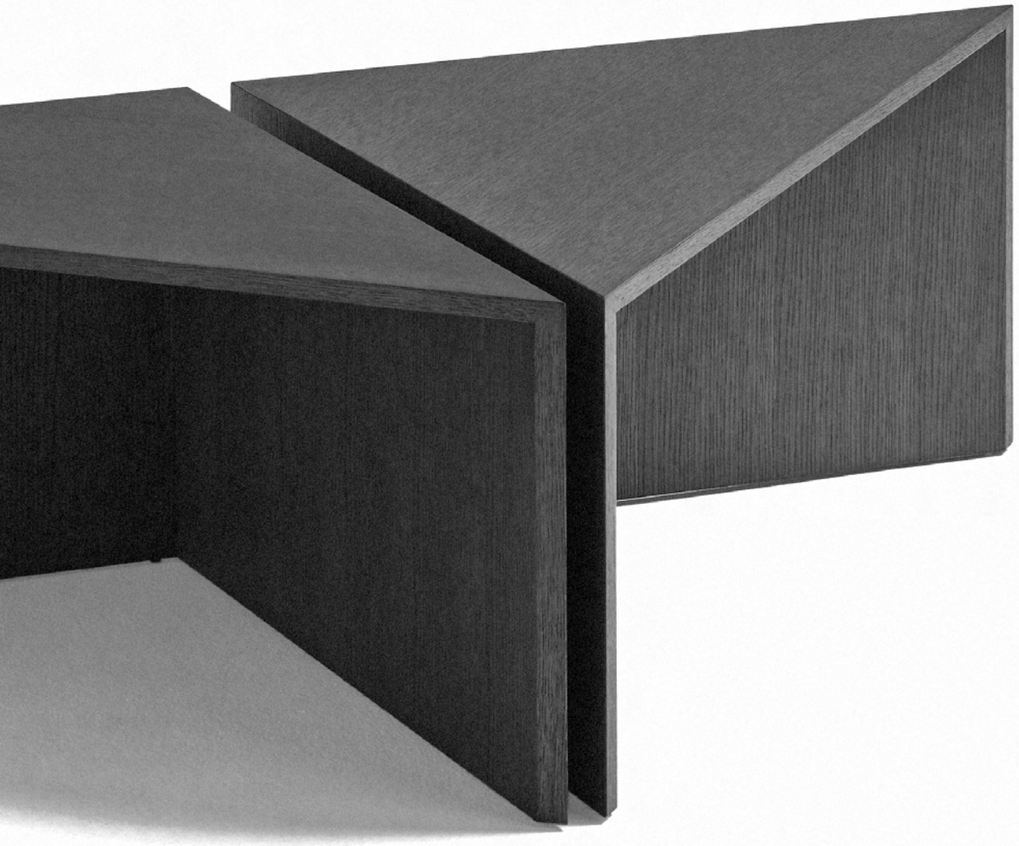

POR-07

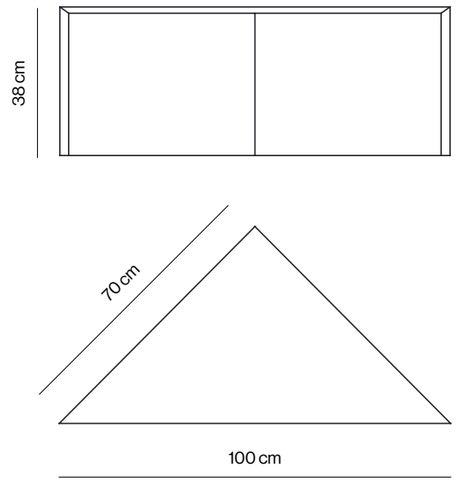

EXO COLLECTION

Exo collection designed by PerezOchando consists of tables, consoles and television furniture. It is characterised by a metal structure that forms an essential part of the design. Its perfect combination with the materials of the top and the shelf make for an elegant and unique ensemble.

SIDE TABLE

EXO-66

TV FURNITURE

EXOV-24

COFFEE TABLE

EXO-26

EXO-00

CONSOLE

EXOY-03
EXOY-23

SOFA CONSOLE

EXO-03
EXOY-83

Exo collection guarantees total customisation of your design to create exclusive, made-to-measure tables. Its different shapes, morphologies and sizes as well as the number of finishes available for shelf and top make it the versatility par excellence. In this page, Exo side table in black lacquer and micro-textured black thermo-lacquered metal.

EXO SIDE TABLE 60x60x50 cm Stone lacquer

Exo is fundamentally characterised by its versatility and originality. The immense number of combinations and finishes make this design a piece that blends in perfectly with all kinds of environments and settings, always adding its own particular touch.

Exo coffee table 120x60x40 cm in toasted oak top and stone lacquer shelf finish.

Vivienda Noviembre - ERRE Arquitectura. Valencia, Spain.

Selected for projects all over the world, Exo guarantees quality, stability and prominence in the centre of any room thanks to its rounded tops and light legs. It stands out for the balance of its forms and raises the level of the environment.

EXO COFFEE TABLE 100x100x40 cm Ash oak | Stone lacquer

Mallorcair FBO - Marga Comas. Mallorca, España.

Exo TV support is a light, versatile solution that adapts to the needs of each room. Due to the wide variety of colours it offers, it can be easily integrated into any inter ior.

Exo console is a unique piece that stands out as a functional and visually light solution, capable of adapting to any space.

Exo console table 120x35x74 cm in graphite and stone lacquer.

On the right, Exo console table in taupe lacquer.

Its perfect mimicry with the sofa and the environment make this console table an ideal element to separate spaces within the same room. It also brings elegance and a touch of good taste to the whole environment thanks to its simple shapes and its light and original appearance.

The console is an example of the variety and possibilities offered by a great design such as Exo, taken to other types of product such as auxiliary consoles. With its practicality, elegance and design, the Exo auxiliary console is an indispensable piece of furniture.

The wide variety of finishes of this console table allows it to blend in with all types of environments and spaces where the design perfectly conveys the distinction of spaces. Its dimensions make it the ideal complement to be placed behind the sofa, offering comfort and practicality in total harmony with the originality of the collection.

On these pages, sofa console in light oak and a taupe thermo-lacquered structure.

EXO-66

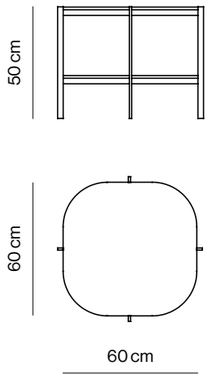

EXO-26

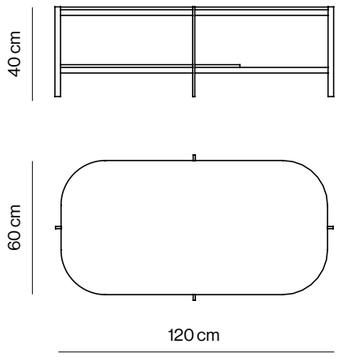

EXO-00

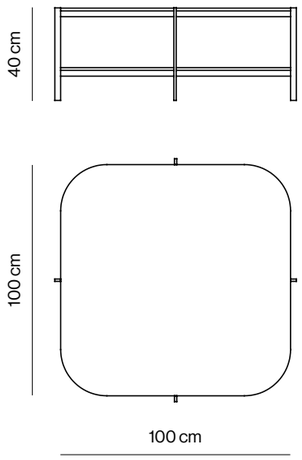

EXOY-03

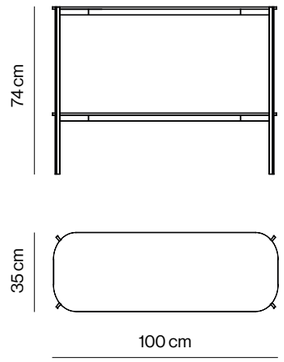

EXOY-23

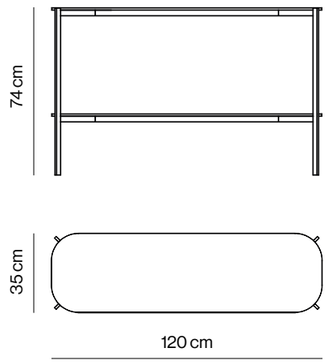

EXOV-24

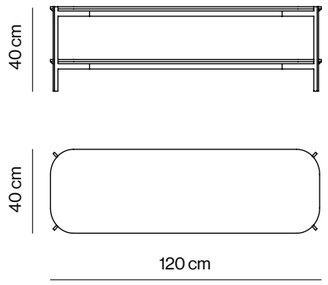

EXO-03

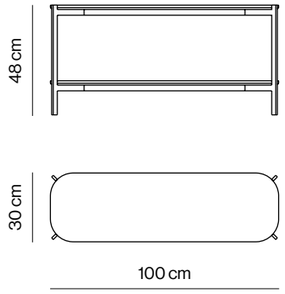

EXOY-83

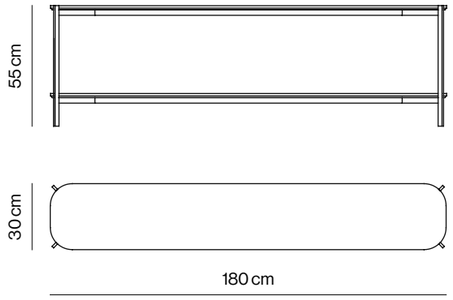

EXO ROUND COLLECTION

Exo Round coffee table collection designed by PerezOchando is characterised by its simple elegance and functionality. Its perfect combination with noble materials creates an elegant and distinguished ensemble.

On this page, Exo Round table
Ø120x40 cm in travertine marble
and taupe lacquer.

Exo Round table offers customisation possibilities that make it a unique and timeless model. The wide variety of finishes and sizes makes this table adaptable to all kinds of spaces.

Exo Round table Ø55x55 cm in natural walnut and stone lacquer.

Aldar Square HQ - The Total Office. Abu Dhabi, United Arab Emirates.

In our origins, our intention has always been to create tables that can bring great personality to the space where they are placed, tables that can totally blend in with their surroundings, not only with the rest of the furniture, but also with small details such as carpets, lamps, decorative elements, etc.

EXO ROUND TABLE Ø55x55 cm White marble | Sand lacquer

On these pages, Exo Round table Ø120x40 cm in white marble and ash oak, and Exo Round table Ø100x40 cm in black marble and lacquer.

Exo Round collection is the extension of the Exo collection. The incorporation of finishes such as walnut and marble in all sizes makes it easy to adapt to different spaces.

EXO-55R

EXO-74R

EXO-04R

EXO-24R

EXO-55R

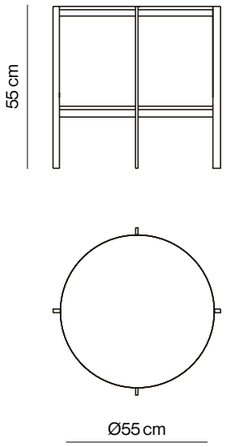

EXO-74R

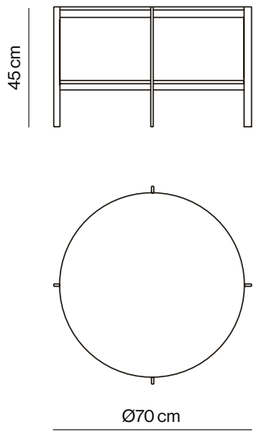

EXO-04R

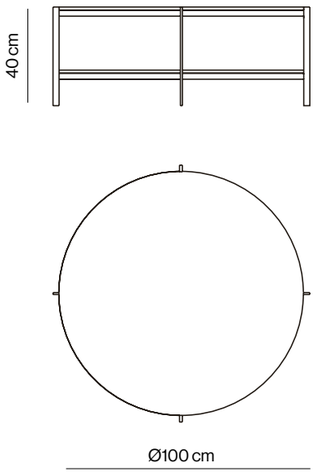

EXO-24R

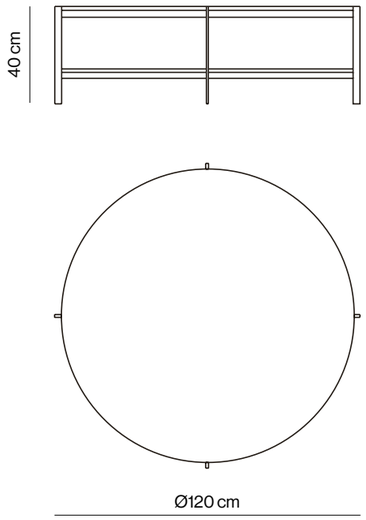

REFLEX COLLECTION

KENDO Reflex Collection.

Reflex concept

Collection. Reflex KENDO

Reflex collection designed by Discoh Design proposes a visual play between two geometries. Its volumes and planes allow perfect adaptation and mimicry with a wide range of environments.

Reflex coffee table Ø100x42 cm in natural oak with micro-textured white thermo-lacquered structure.

Reflex table Ø55x47 cm in taupe lacquer and Reflex table Ø70x42 cm in ash oak.

On the left page, Parocks Luxury Hotel & Spa. Paros, Greece.

Tummen House - IN56. Vizcaya, Spain.

Materials such as lacquer, walnut, compact slate, statuario ceramic and oak achieve great harmony with each other and, at the same time, raise the level of the space. The structure is available in white or micro-textured black.

Reflex table Ø70x42 cm and table Ø55x47 cm in stone lacquer with micro-textured white thermo-lacquered structure.

AC Hotel Punta Cana - Requena y Plaza. Punta Cana, Dominican Republic.

Safragell Ibiza Suites & Spa - Espai 31. Ibiza, Spain.

REFLEX-45R

REFLEX-04R

REFLEX-54R

REFLEX-74R

REFLEX-45R

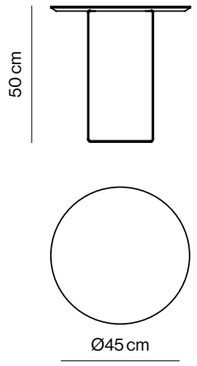

REFLEX-54R

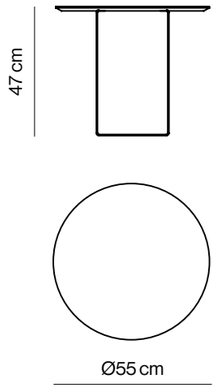

REFLEX-74R

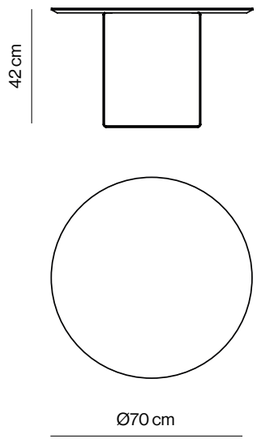

REFLEX-04R

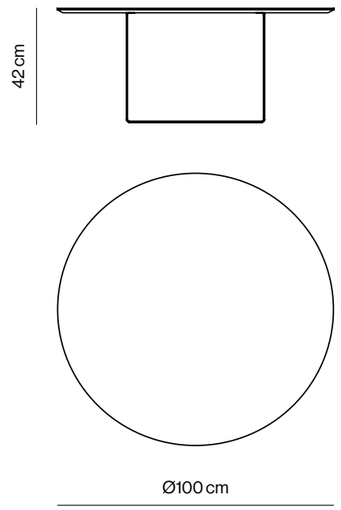

IDRA COLLECTION

Idra concept

Collection. Idra KENDO

Idra collection designed by PerezOchando is the perfect combination of versatility and functionality. The wide range of finishes allows a whole world of possibilities to be explored, opening the door to play with different sizes and combinations. The enveloping shape of the legs, as well as the sensation of balance that they transmit, make Idra the perfect element in contract and home spaces, both as an auxiliary and as a centrepiece.

Idra offers a wide variety of materials and finishes for the top together with a metallic structure that can be in black or white thermolacquered lacquer. Its versatility also lies in the visual power of the table in different sizes, either to be placed as a whole or individually. Always showing an original, elegant and clean design that gives the space a touch of good taste and tranquillity.

Idra collection has a simple geometry and a light base made up of multiple rods. These tables provide a very attractive and personal visual play in any environment. Thanks to its easy blending in with its surroundings, Idra is an indispensable part of many spaces around the world.

Idra Ø100x40 cm in sand lacquer and black metal | Idra Ø45x50 cm in ocean lacquer and black metal

Aldar Square HQ - The Total Office. Abu Dhabi, United Arab Emirates.

IDRA TABLES Ø70x40 cm | Ø55x52 cm Slate compact | Black glass top

Idra has become a benchmark and indispensable element for numerous national and international projects, partly because Idra's finishes provide great versatility to adapt the table to any type of installation. An example of the exclusivity that Idra can offer is the use of the top in compact slate, which helps to enhance the environment and blends in perfectly with the surroundings.

On these pages, Idra Ø45x50 cm in white lacquer and metal and Idra Ø100x40 cm in stone lacquer and white metal.

BUT
FIRST
COFFEE

Canterbury Road, Toorak - Le Loft. Melbourne, Australia.

Bright Street, Brighton II - Le Loft. Melbourne, Australia.

IDRA-55R
IDRA-74R
IDRA-45R
IDRA-04R

IDRA-45R

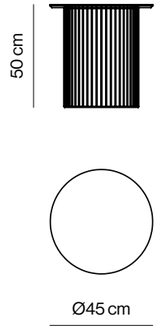

IDRA-55R

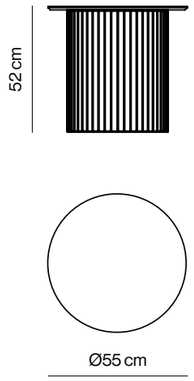

Idra by PerezOchando is a coffee table based on an attractive visual effect and reveals a taste for elegant and novel design, as well as contributing at the same time to generate a suitable atmosphere.

Its wide variety of finishes together with the different sizes available represents an opportunity for total customisation of a timeless and versatile design that makes it suitable for any project.

IDRA-74R

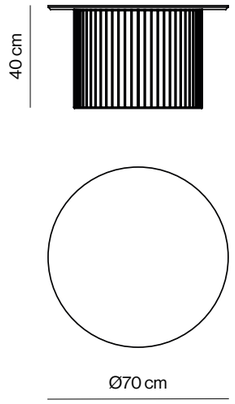

IDRA-04R

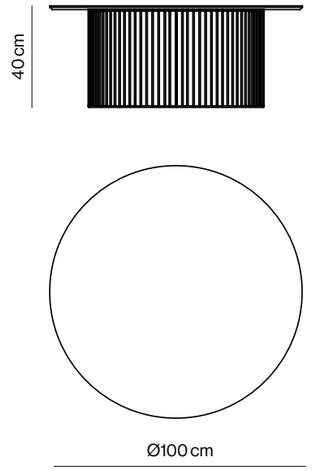

TOTEM COLLECTION

Totem designed by Gabriel Teixidó is a TV stand that rotates on its vertical axis. Its purist lines allow it to be placed in different spaces. It comes in several sizes to adapt easily to a home, office or hotel. In addition, it can rotate so that the television can be enjoyed comfortably in two different areas within the same space.

On this page, Totem sand lacquer panel and micro-textured black thermo-lacquered structure and base.

Hotel Neptuno - Julio Guixeres, Valencia, Spain.

Totem offers great comfort in all kinds of spaces. Its swivelling options and the wide variety of finishes it offers make it a completely indispensable piece of furniture when it comes to elegance, refinement and timeless design.

In addition to the dynamism offered by the Totem swivel, it houses the cables inside so that they are not visible and can generate an undesired visual effect. After wiring, recommend a maximum swivel of 180º. Its shelf in the lower area guarantees absolute comfort as it allows all kinds of objects to be placed on it, thus facilitating connections and providing well-being.

In this page, Totem ocean lacquer panel and micro-textured black thermo-lacquered structure and base

Totem incorporates a removable panel at the back that allows cables to be hidden inside so that only what is visually favourable in the space is visible.

Totem sand lacquer panel and stainless steel structure and base.

On these pages, Totem slate lacquer panel and micro-textured black thermo-lacquered structure and base .

Totem is capable of adapting to all kinds of spaces, whether they are offices, waiting rooms, management offices, suites... Always offering the necessary versatility to create several different spaces in the same room.

Parador de Cádiz. Cadiz, Spain.

TV-24

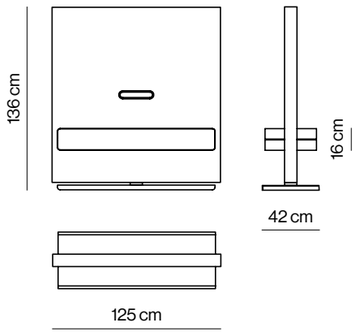

TV-44

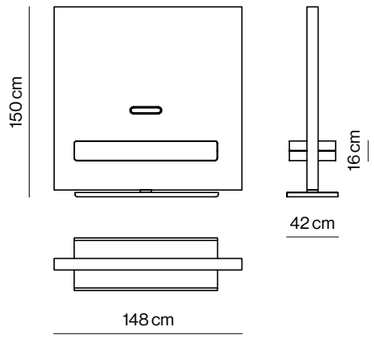

TV-64

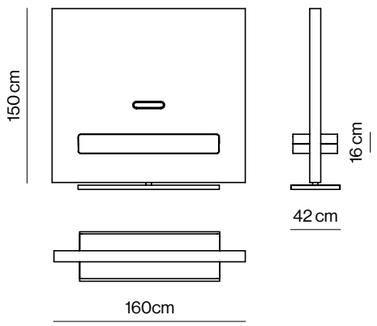

TV-84

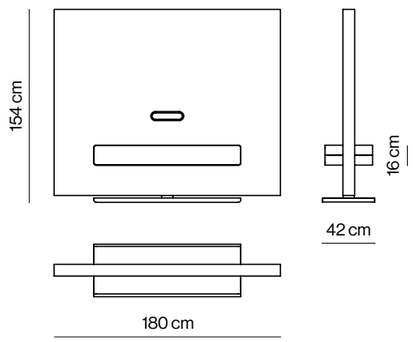

RITA COLLECTION

In the Rita collection designed by Antoni Arola, the visual of transparency is observed together with the straightness and simplicity of flatness. With its intrinsic natural elegance and its different sizes and finishes, it becomes a unique piece of great aesthetic value.

COFFEE TABLE | SIDE TABLE

RITA-66

RITA-77

RITA-00

RITA-26
RITA-22

CONSOLE

RITY-23

DESK

RITP-24

BOOKCASE

RITK-83

Rita table transports us to a geometric universe of straight lines and planes that connect in a surprising way with the architectural spaces of its surroundings and reveal a wide range of possible uses. Its elegance in simplicity provides a unique design solution that blends in with many types of rooms and interiors.

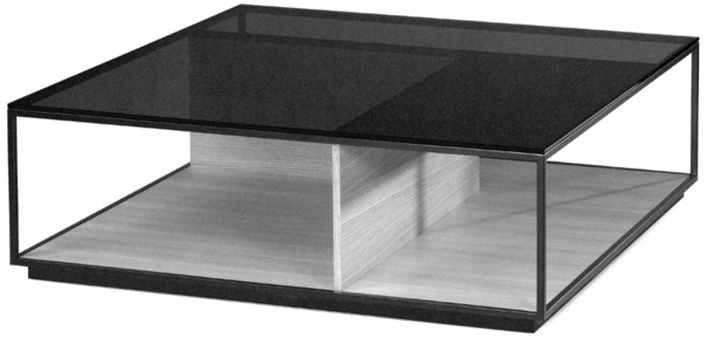

The tables are composed of a thermo-lacquered metal structure in micro-textured black, a base and vertical sides, which can be customised in lacquer, walnut or oak, and a grey smoked glass top.

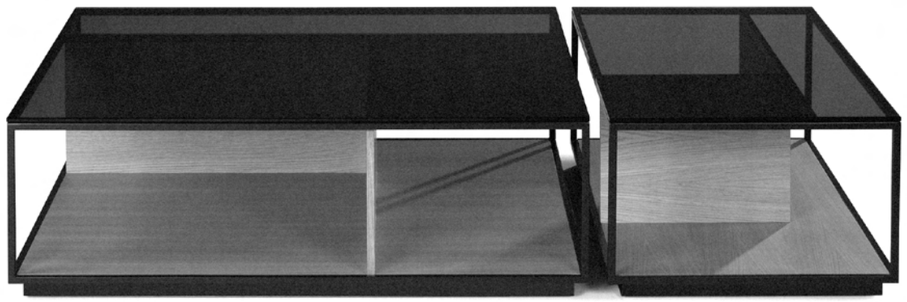

Rita coffee table 60x60x40 cm in ash oak with smoked grey glass top. Micro-textured black thermo-lacquered structure finish.

Hotel Neptuno - Julio Guixeres. Valencia, Spain.

Rita Collection. Coffee table

Its exact proportions make this table a piece that works perfectly as a whole or individually. Always giving the environment a touch of distinction and design that perfectly guarantees the timelessness of the furniture.

RITA TABLE 120x60x40 cm Sand lacquer | Smoked grey glass

Thanks to its particular and elegant design, Rita is the ideal element to place in the centre of the room, as it brings together and enhances the originality of the environment, creating a perfect synthesis. It is a table with a sober, honest and timeless character that adds a unique touch to the room with the play of materials between the structure and the top.

Rita coffee table 120x120x40 cm in natural walnut with smoked grey glass top.

Biniatró House - Negre Studio. Mallorca, Spain.

Rita Collection. Coffee table

Rita 100x100x40 cm in natural walnut with smoked grey glass top.
Image: Vivienda en Gros - Nuvan. San Sebastián, Spain.

RITA CONSOLE TABLE 120x35x80 cm Smoked grey glass | Black lacquer

Rita console is one of the great pieces of this collection. Versatile, elegant and apparently simple, shows with its straight lines and planes that the geometry integrated in the product is one of the keys to success, always offering adaptability and good taste to spaces.

It is a distinguished piece that raises the level of any environment. It is a versatile and easily adaptable proposal.

Rita console table 120x35x80 cm in natural walnut with smoked grey glass top. Micro-textured black thermo-lacquered structure finish.

Rita desk 120x45x74 cm with black lacquer shelf and smoked grey glass top.

Rita desk is one of the essential components of this product family. Its lightness, transparency and shelf make it a unique working space where organisation and comfort are the prerequisites for success.

Its conjunction with the rest of the pieces in the collection is maximum, giving the environment the sensation of being a whole, of which the different parts offer their personality, dynamism and substantial balance.

RITA BOOKCASE 80x190x30 cm Ash oak

Rita bookcase expresses the simple elegance of timelessness in a light vision of sober furniture, which allows it to be placed in contexts and environments of all kinds.

The bookcase is design, elegance and mastery in a single piece. The finesse of its shelves together with simplicity, which is the essence of this collection, offer style and balance to one of the indispensable products in terms of organisation, exquisiteness and adaptability.

Rita bookcase in ash oak with micro-textured black thermo-lacquered structure finish.

RITA-66

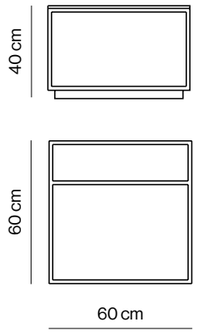

RITA-77

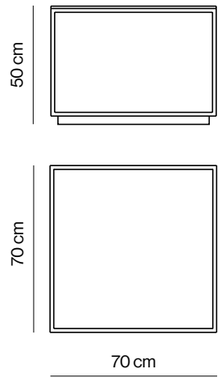

RITA-00

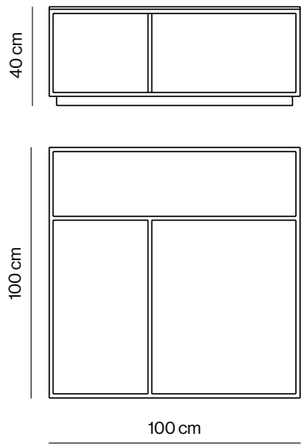

RITA-22

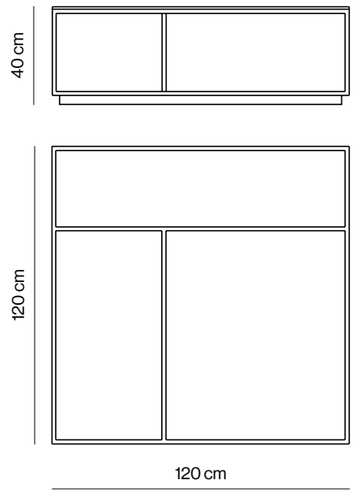

RITA-26

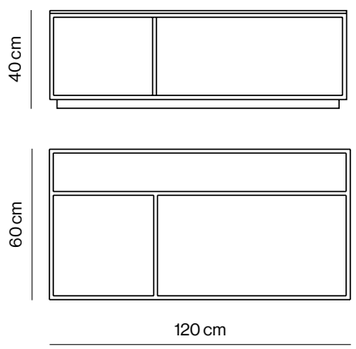

RITY-23

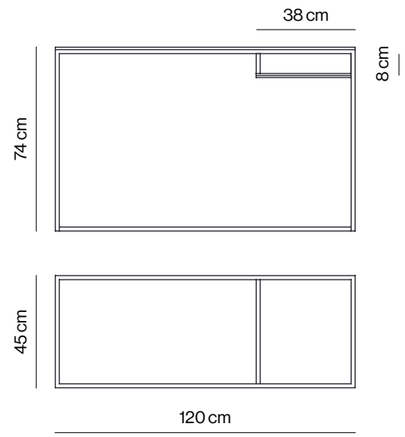

RITP-24

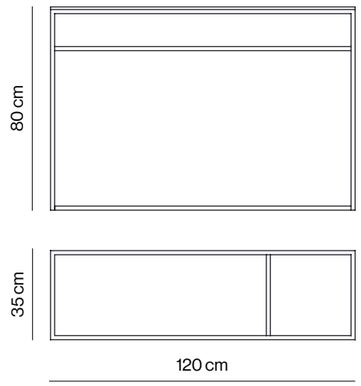

RITK-83

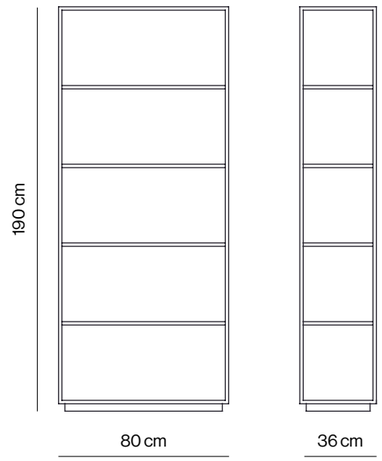

RITA LITE COLLECTION

Rita Lite coffee table designed by Antoni Arola, an extension of the Rita collection, stands out for its balance of visual lightness. Thanks to the architecture of its structure and the finishes it offers, the table brings elegance to any environment.

Rita Lite coffee table 70x70x51 cm in black marble and ash oak with black microtextured thermo-lacquered structure.

Rita Lite coffee table 120x60x41 cm in black marble and lacquer with black microtex-tured thermo-lacquered structure.

Rita Lite collection allows an easy integration of the furniture in any interior thanks to the innumerable combination of its finishes. Therefore, offering versatility and customisation to the user's taste, always standing out for the simplicity of elegance and the integration of all the elements in one.

Rita Lite coffee table 120x120x41 cm in ash oak with smoked grey glass top.

Rita sofa console 180x30x55 cm in ash oak with smoked grey glass top.

The combination of its finishes facilitates the integration of the furniture into any interior. Materials such as glass, lacquer, walnut and oak achieve a great harmony between them and, at the same time, complete the space.

Rita Lite collection designed by Antoni Arola, characterised by its formal and elegant style, is composed of a top available in different finishes such as grey smoked tempered glass or marble, a structure in black micro-textured thermo-lacquered metal and a base in lacquer, oak or walnut finish.

COFFEE TABLE | SIDE TABLE

RITALITE-77

COFFEE TABLE

RITALITE-26

COFFEE TABLE

RITALITE-00
RITALITE-22

SOFA CONSOLE

RITALY-83

RITALITE-77

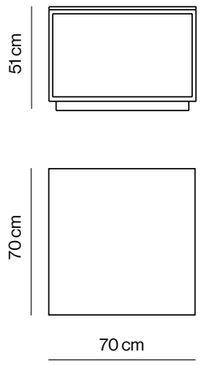

RITALITE-00

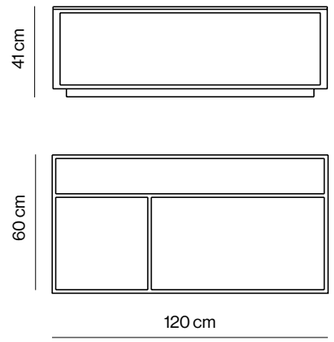

RITALITE-26

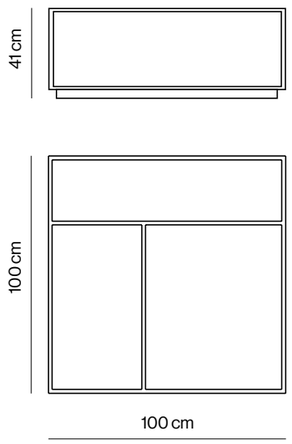

RITALITE-22

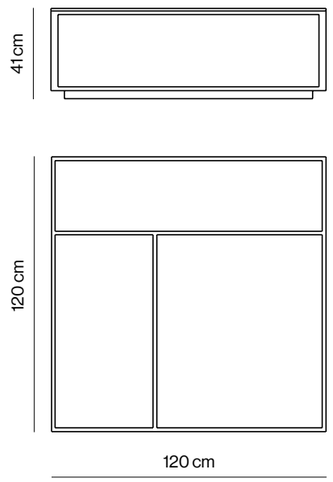

The top of the side console is available in smoked tempered glass while the base can be in oak, walnut or lacquer. The structure is available in a choice of black micro-textured thermo-lacquered finish or lacquer.

RITALY-83

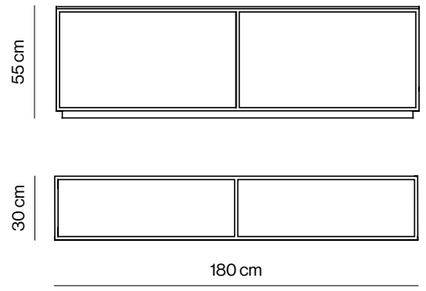

NARUK COLLECTION

Naruk is a collection designed by Vicente Gallega whose apparently simple lines reveal a highly suggestive play of inclined planes. The console has two swivel trays concealed in the lower part of the top.

On these pages, Naruk console in sand lacquer.

The presence of Naruk in entrances and corridors makes the difference, it stands out for its easy integration in both residential and installations, always providing its exclusive touch of particular elegance without claiming excessive prominence. It is a unique, simple and practical solution.

Naruk console in natural walnut.

Naruk console is a design based on simplicity, geometry and a play of planes, providing a unique visual effect that combines perfectly with the opening of the drawers it incorporates.

On these pages, Naruk desk in natural oak.

Naruk desk has a perfectly studied arrangement of the angles and folds that make this piece not only cover the practical function but also make it an object of easy coexistence in different environments at the same time that it is an aesthetic icon.

Naruk desk integrates perfectly in its minimalist set a pull-out drawer, with a useful hollow of 65x32x4 cm.

Naruk desk 130x50x75 cm in natural oak.

Through its original combination of planes, Naruk provides the perfect visual play that conveys elegance, tranquillity and calm in all its finishes.

Naruk desk 130x50x75 cm in ash oak.

On this page, Naruk desk in natural walnut.

NY-13 SB

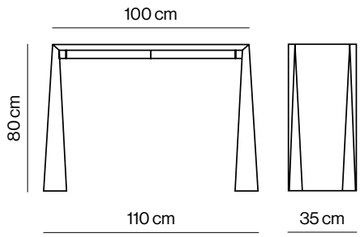

NY-33 SB

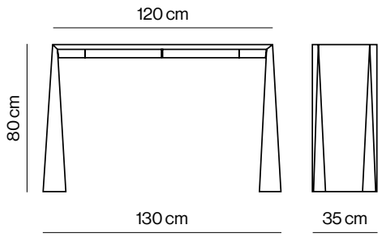

NY-13

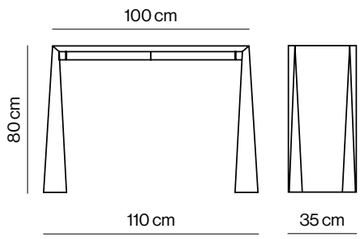

NY-33

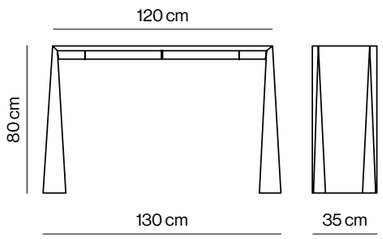

NX-03

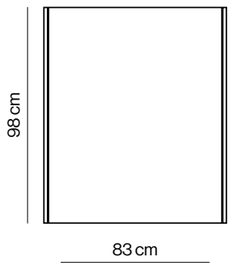

NP-35

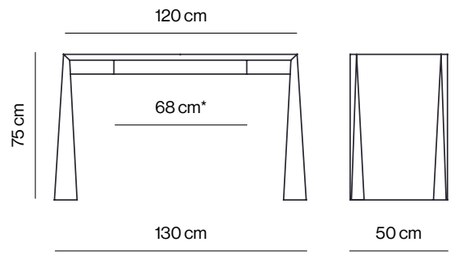

*drawer's inner room: 65x32x4 cm

BECO COLLECTION

The essence of the present and the past are reflected in Beco designed by Luis Arrivillaga, a desk with a warm and welcoming look, in which every detail is designed to feel the beauty of its materials. Its lift-up top reveals an interior space with a highly functional sliding tray.

On this page, Beco desk in ash oak finish.

On this page, Beco desk in natural oak finish.

Beco is the perfect example of functionality and elegance. Its simple shape as well as its incredible practicality make this piece an indispensable element in numerous projects of all kinds, both nationally and internationally.

Beco adapts perfectly to an office space or a hotel room where a homely feel is sought after. A very practical and original solution that thanks to its natural finishes brings warmth to the room.

On this page, Beco desk in walnut finish.

The desk is available in two different sizes, making it very versatile for any type of room. It offers the possibility of being fixed or having an elevating top, adding a useful storage space, with a sliding tray inside to organise and store work objects.

Beco desk 130x53x74 cm in light oak.

Kongress Hotel Davos - Alexander Wilhelm.
Davos, Switzerland.

BECO-05 F

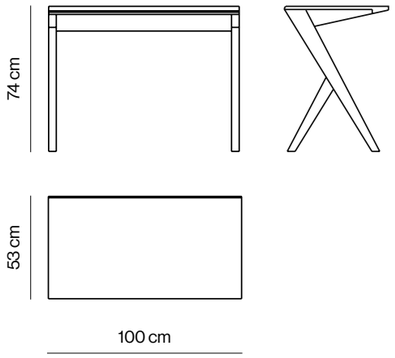

BECO-35 F

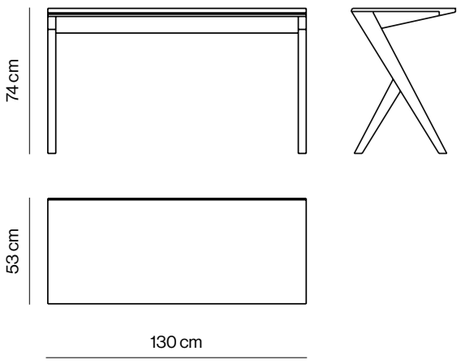

BECO-35 E

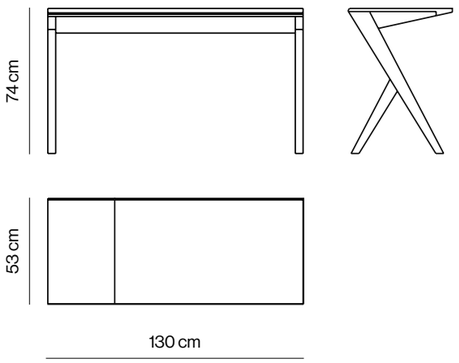

GREY COLLECTION

Grey is a collection of consoles designed by Francesc Rifé Studio whose smoked grey or bronze mirror gives them a distinguished and elegant air that brings spaciousness and dynamism to any room, always offering practicality and good taste.

On the right page, Grey console 110x35x165 cm with smoked grey mirror.

On these page, Grey console 61x35x185 cm with smoked grey mirror.

Grey is a minimalist, practical console mirror that makes a difference. It offers the possibility of integrating an indirect light led luminaire in the lower base of its drawer, adding warmth and functionality to the design. The console follows the line of technical, original and customisable design that allows it to adapt to numerous environments and spaces.

On the left page, Armadale Residence - Flack Studio. Melbourne, Australia.

Among the many possibilities offered by Grey, there is the option of integrating LED lights in the bottom base of the drawer.

Grey console is available in two versions depending on the size of the back panel and the position of the drawer, to adapt to all types of interiors. Its play of straight planes as well as the reflection of the mirror give it unique characteristics that make it an original piece that is at the same time simply elegant.

GREY-13

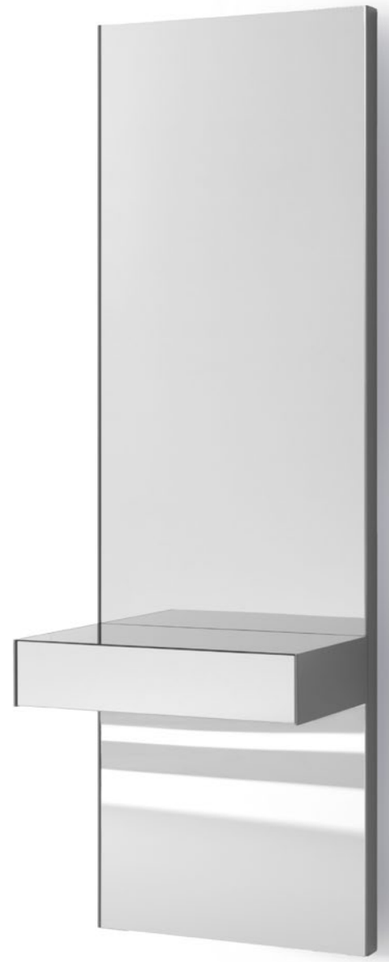

GREY-638

GREY-638

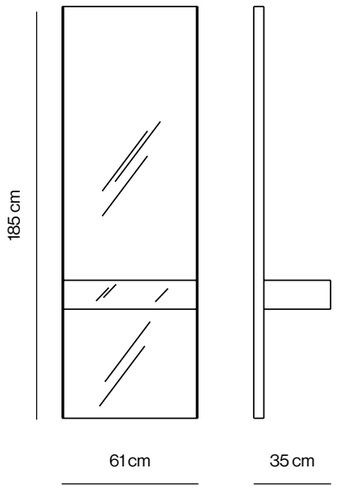

GREY-13

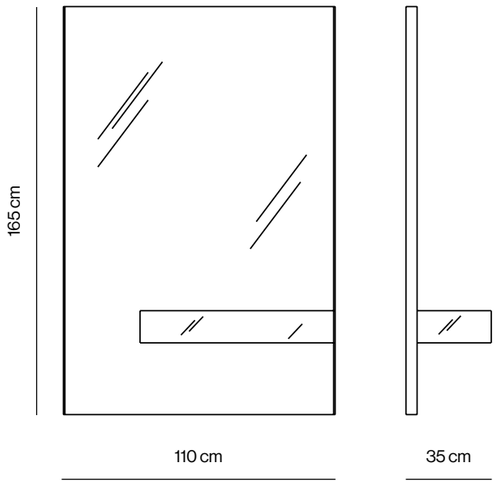

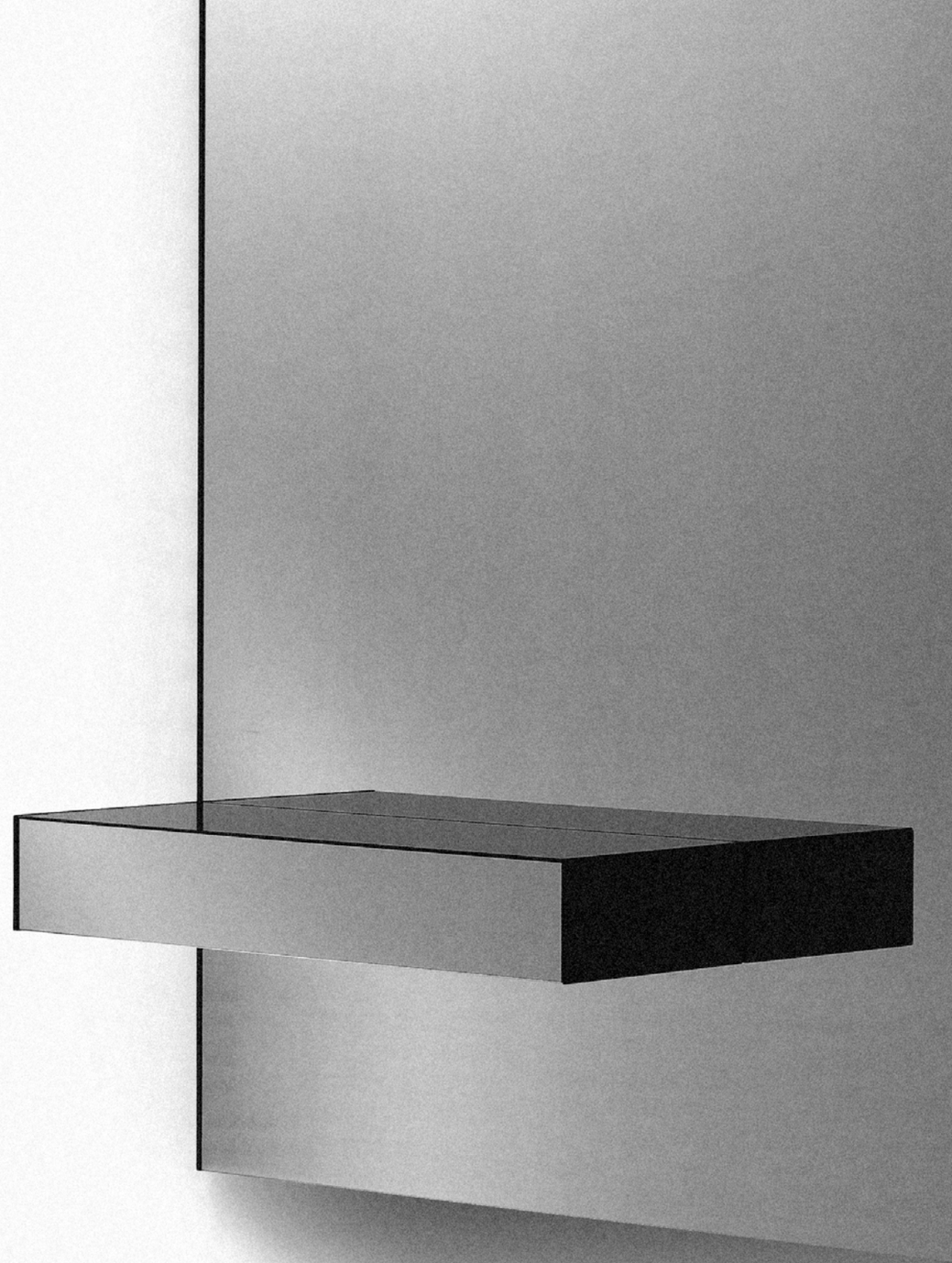

VAN COLLECTION

Van collection designed by Francesc Rifé Studio stands out for its great woodwork. The solid wood structure gives it the necessary solidity and transmits the warmth of its materials. Easily accepted both in the home and in contract installations.

On these pages, Van side table
Ø40x43 cm in ash beech.

It is a collection that, thanks to its size, provides numerous possibilities to create different and unique spaces. Thanks to the combinations of colours and materials, it is a piece that fits perfectly with decorative environments.

On the right page, Ricard Camarena Restaurant - Francesc Rifé Studio. Valencia, Spain.

Can Rafalet - Espafi. Ibiza, Spain.

La Caixa - Francesc Rifé Studio. Spain.

Linkedin - The Total Office. Dubai, United Arab Emirates.

Van is the perfect combination of classicism and originality, being able to adapt perfectly to spaces of different styles and tastes. It can be combined thanks to its different sizes and also works individually. This collection provides numerous possible options to make any type of space a dynamic and pleasant place.

Van table Ø60x37 cm with black ceramic top and walnut legs | Van table Ø40x43 cm in natural walnut

With extreme care in the treatment of materials, the solid structure brings simplicity and solidity to an adaptable table. The variety of sizes and its own versatility make Van a table that works together and on its own.

VAN-40R

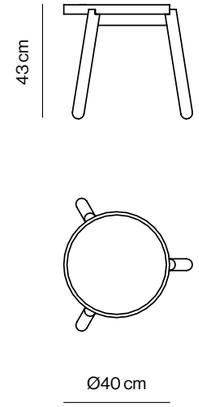

VAN-60R

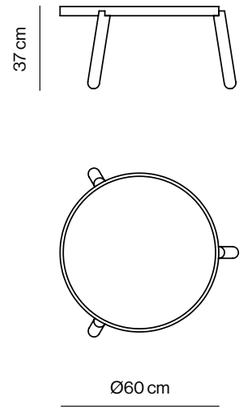

VAN-80R

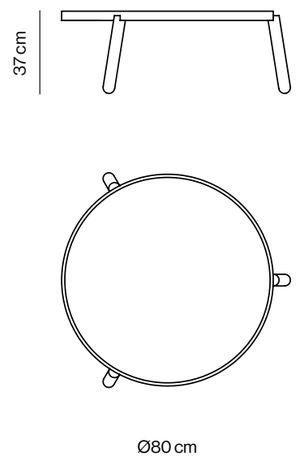

LOTTA COLLECTION

The nobility of its materials and the purity of its design are the essence of Lotta, a collection of tables designed by Antoni Arola capable of raising the level of any room. Its elegance and its formal structure allow the table to adapt to any environment.

On these pages, Lotta table Ø55x45 cm in natural walnut and Lotta table Ø55x55 cm in natural walnut and white marble.

On the right page, Lotta bedside table in ash beech and taupe lacquer.

Zodiac -Estudio Negre. Mallorca, Spain.

Casa Andia - Verne Arquitectura. Pamplona, Spain.

VLN - Marga Comas. Mallorca, Spain.

Lotta coffee table Ø100x38 cm with white marble top and natural walnut legs.

Lotta is elegance transformed into design, its wide range of finishes and sizes allows it to be placed in all kinds of spaces, either as a coffee table or providing a subtle touch as a side table.

Lotta coffee table Ø120x38 cm with black marble top and natural walnut legs.

BEATON
CORAZÓN
AZUL
SEA
AMOR
NOCHE

LOTTA-45R

LOTTA-55R

LOTTA-54R

LOTTA-00R

LOTTA--77R

LOTTA-22R

LOTTA-45R

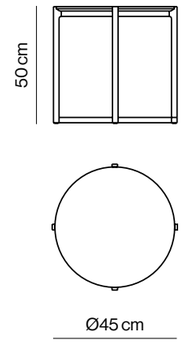

LOTTA-54R

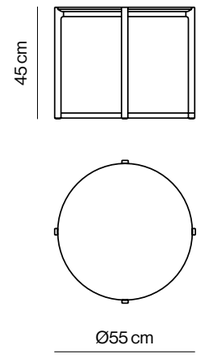

LOTTA-55R

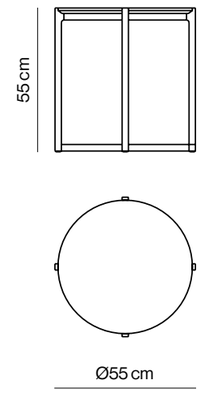

LOTTA-77R

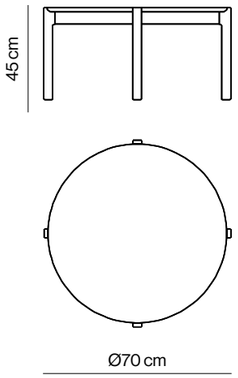

LOTTA-00R

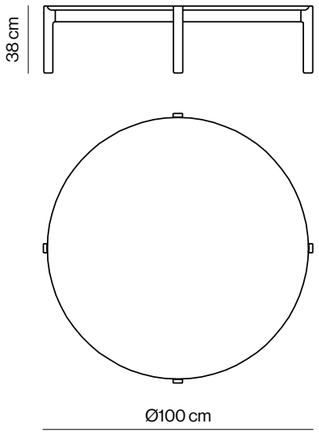

LOTTA-22R

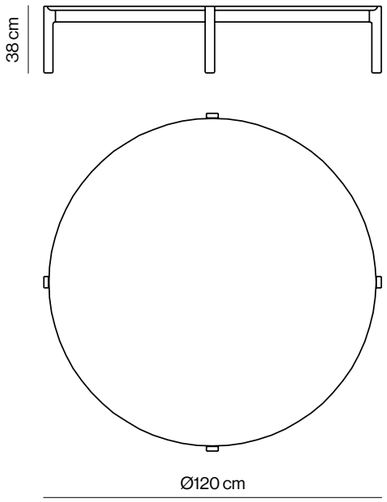

TRAZO
COLLECTION

Visual lightness, personality and strength are the characteristics of Trazo table designed by PerezOchando, a perfect table that brings freshness and modernity to home or contract spaces, adapting through its neutrality to any decorative style of its surroundings.

Trazo table 40x40x50 cm and Trazo table 60x60x40 cm in black lacquer.

On this pages, Trazo tables in sand lacquer.

Trazo is a table with apparently simple lines that reveal a very suggestive game through the encounters between the top and its legs. It is a versatile proposal that offers a game of elegance and simplicity in any room.

Més que disseny Studio.
Valencia, Spain.

The coffee tables are made of lacquered metal or black or white microtextured thermo-lacquered metal. It is available in a wide variety of colors to adapt to any project.

TRAZO-44

TRAZO-66

TRAZO-44

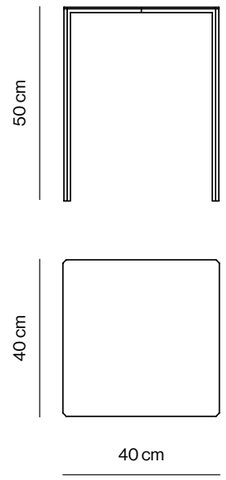

TRAZO-66

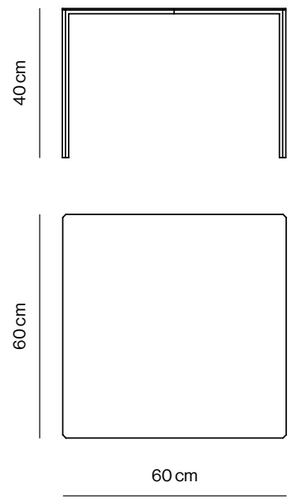

YOHSI COLLECTION

Yohsi collection designed by Discoh Design is undoubtedly one of the most versatile and functional collections as it adapts perfectly to all types of environments, blending in with its surroundings and adding a personal and elegant touch. Selected in numerous projects all over the world, Yohsi has become an essential for interior designers with different styles who have discovered the essential value of this table in their spaces.

It stands out for its enormous versatility, capable of adapting to any space and lifestyle. The multiple combinations of materials make it possible to create a table for every type of environment.

On this page, Linkedin Offices. Madrid, Spain.

On the right page, Pernod Ricard Office - ICD Brookfield Place, Dubai

Ecole 42 School - The Total Office. Abu Dhabi, United Arab Emirates.

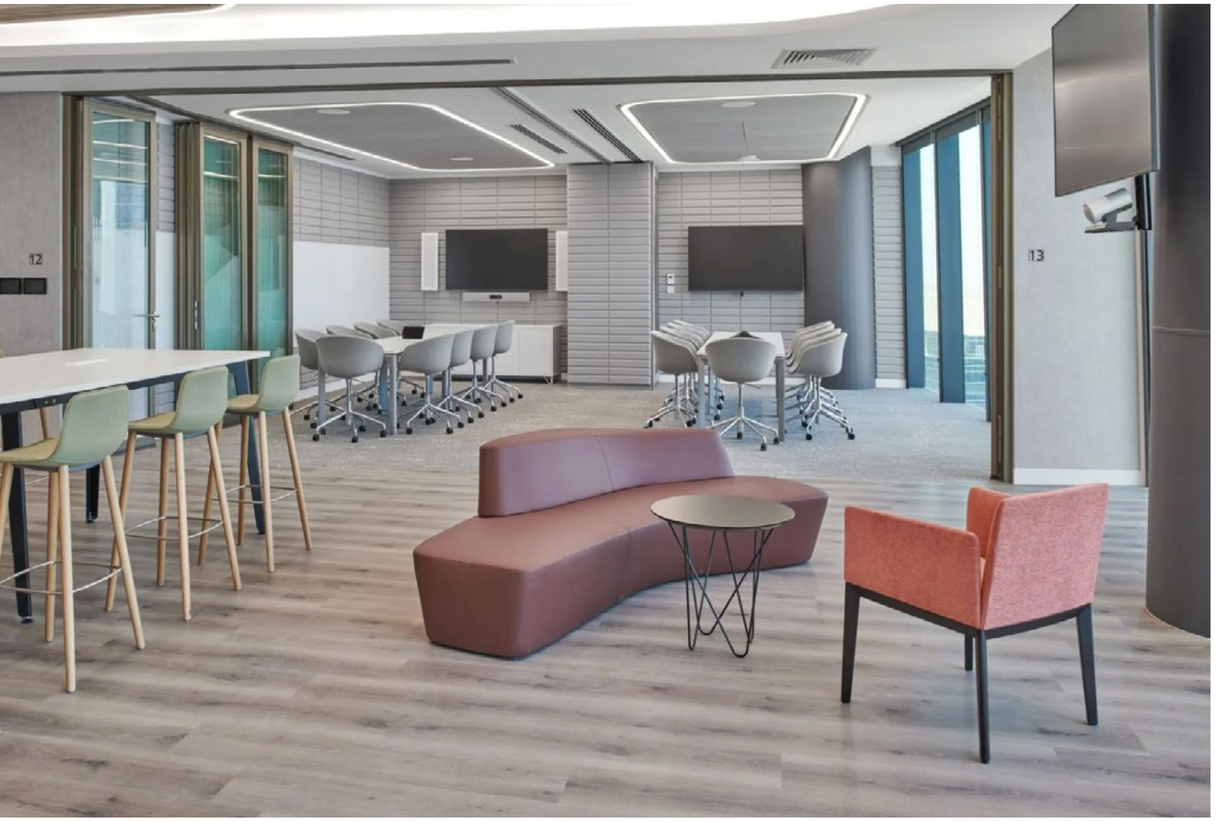

Marriott Management Office, DIFC - The Total Office. Dubai, United Arab Emirates.

Tigotan Lovers & Friends Playa de las Americas. Tenerife, Spain.

The tables can be customised in lacquer, walnut, oak, ash, grey smoked mirror, bronze smoked mirror, black glass or statuary ceramic and the metal legs can be in thermo-lacquered black lacquer, lacquer in other colours, chrome or brass. Yohsi provides all kinds of options, with its finishes and different sizes that make it a versatile and original piece.

Yohsi Ellipse is a collection of coffee tables, composed of an elliptical top supported by a lattice of curved metal rods that are the essence of the piece. It is an extension of the Yohsi collection, with the same set of legs and the same adaptability and versatility in terms of finishes. Its original elliptical shape gives it the ability to be placed in central spaces providing dynamism as well as balance to the environment.

On the right page, Yohsi Ellipse coffee table 140x60x38 cm in black lacquer.

The unique legs of the Yohsi table, as well as the effect of its finishes are the perfect combination in terms of product customisation and total adaptation to projects. Yohsi is a unique design, spread all over the world in numerous rooms of all kinds, always providing an aesthetic point wherever it makes its presence felt.

Yohsi Ellipse coffee table 140x60x38 cm in black lacquer with chromed legs.

Available in two sizes, Yohsi Ellipse is the perfect example of customisable design furniture that takes the environment to another level. Its shape, its legs, make this table the perfect piece for all types of contract spaces, from hotels and offices to residential and restaurants.

Marriott Management Office – DIFC, Dubai.

Its different sizes, as well as the immense variety in terms of finishes, make Yohsi the ideal collection for both combination and individual use. That is why our Yohsi collection is an indispensable part of numerous projects of all kinds both nationally and internationlly.

YOSH-86

YOSH-46

YOSH-55

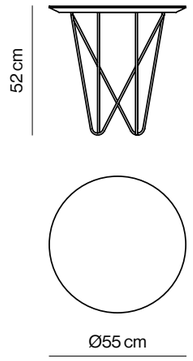

YOSH-74

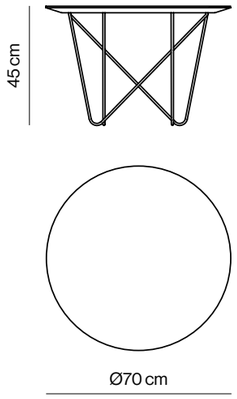

YOSH-03

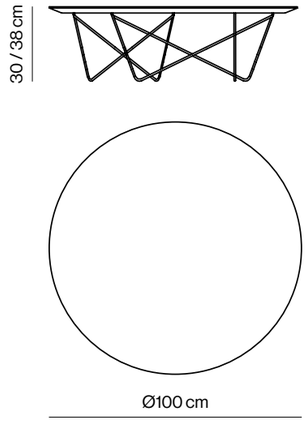

YOSH-23

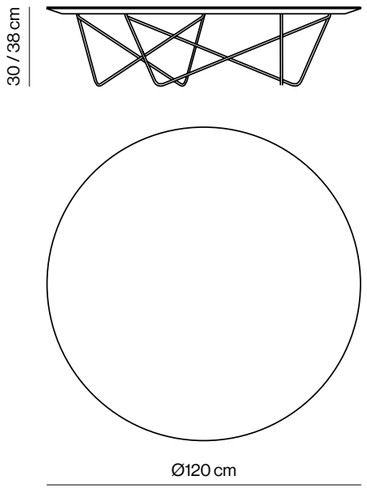

YOSH-46

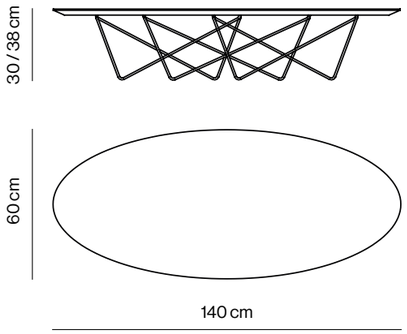

YOSH-86

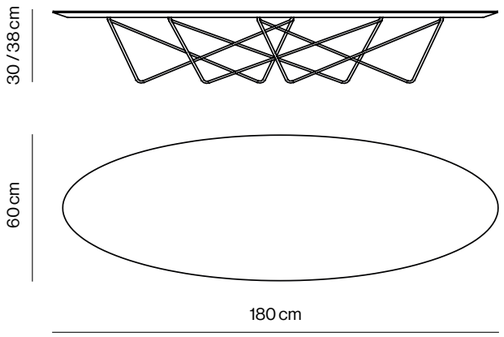

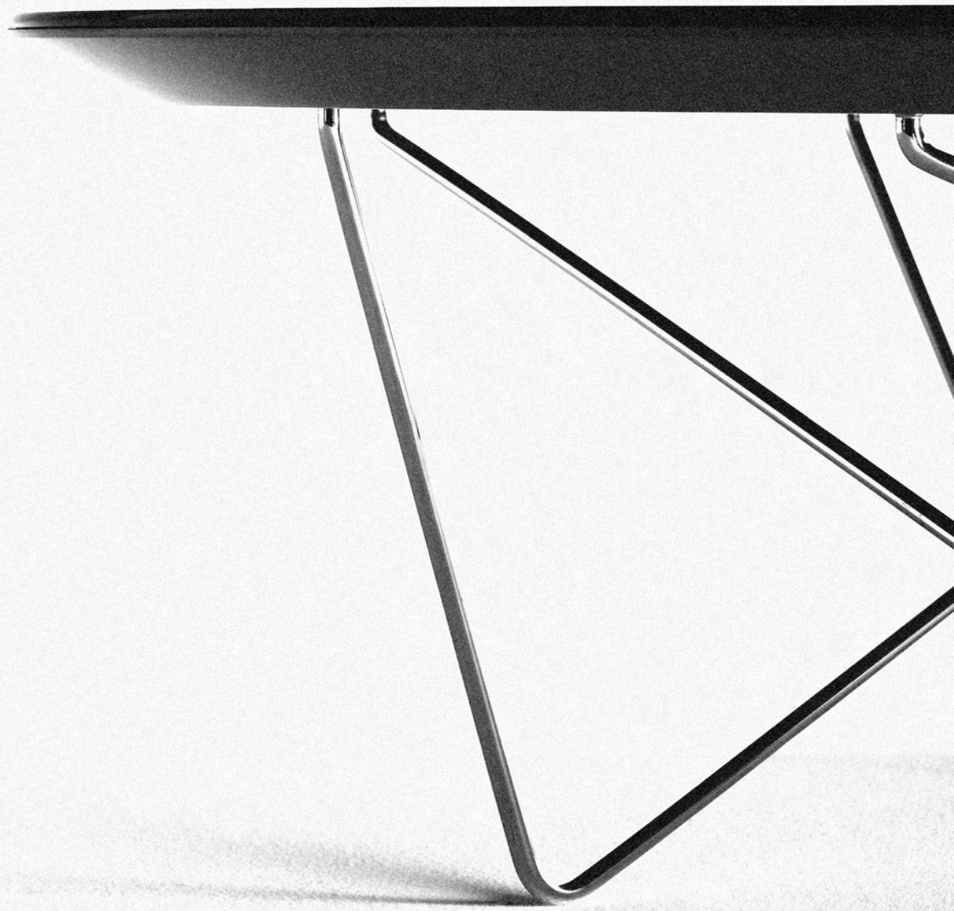

TEMPS COLLECTION

Temps collection designed by Vicente Gallega stands out for its soft, continuous and insinuating shapes that create an elegant, timeless piece with personality. It has been worked with noble materials such as solid beech wood and marble, providing craftsmanship in the elaboration of the piece.

Temps side table 70x70x46 cm in natural beech and white marble.

Due to its characteristics in terms of design, variety of finishes and sizes, it is a very versatile piece. Its rectangular top version is ideal to be placed in central spaces where it can provide all its warmth and sophistication, offering a different touch with its reminiscence to the past within the design.

On these pages, Temps coffee table 120x60x41 cm
in black beech and black marble.

The table is composed of a marble top and a structure in beech wood. A very functional solution that brings great warmth to projects.

Temps coffee table 120x60x41 cm in ash beech and black marble.

Temps combines different materials and finishes to offer different design solutions. Creating unique spaces that allow the table to take on a special, stylish and essential role.

Temps coffee table 120x60x41 cm in natural beech and white marble.

TEMPS-77

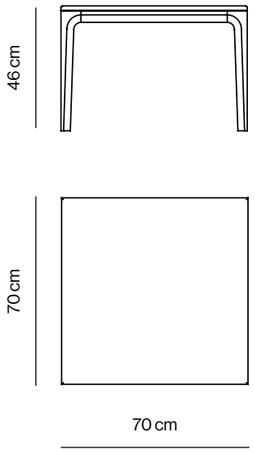

TEMPS-26

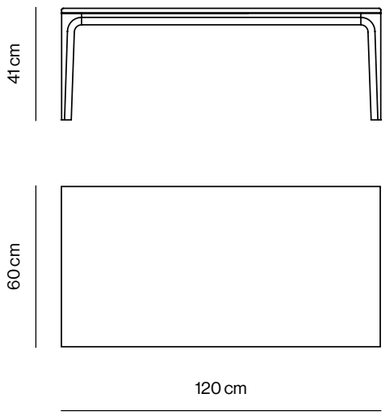

PLAT COLLECTION

Plat is a collection of tables designed by Antoni Arola in which a subtle circular imprint on the top acts as a counterpoint between its predominantly straight lines. It has an extractable drawer in one of its laterals and castors or a static base in its bottom part.

On the right page, VLN - Marga Comas. Mallorca, Spain.

On these pages, two Plat coffee tables 120x120x24 cm
in graphite lacquer.

Plat offers the possibility of displaying all its elegance individually as well as in combination playing with the different finishes available as well as the different sizes presented. Plat is the perfect coffee table, individually or in combination.

On the right page, Greensgate Manchester - Lister and Lister. Manchester, England.

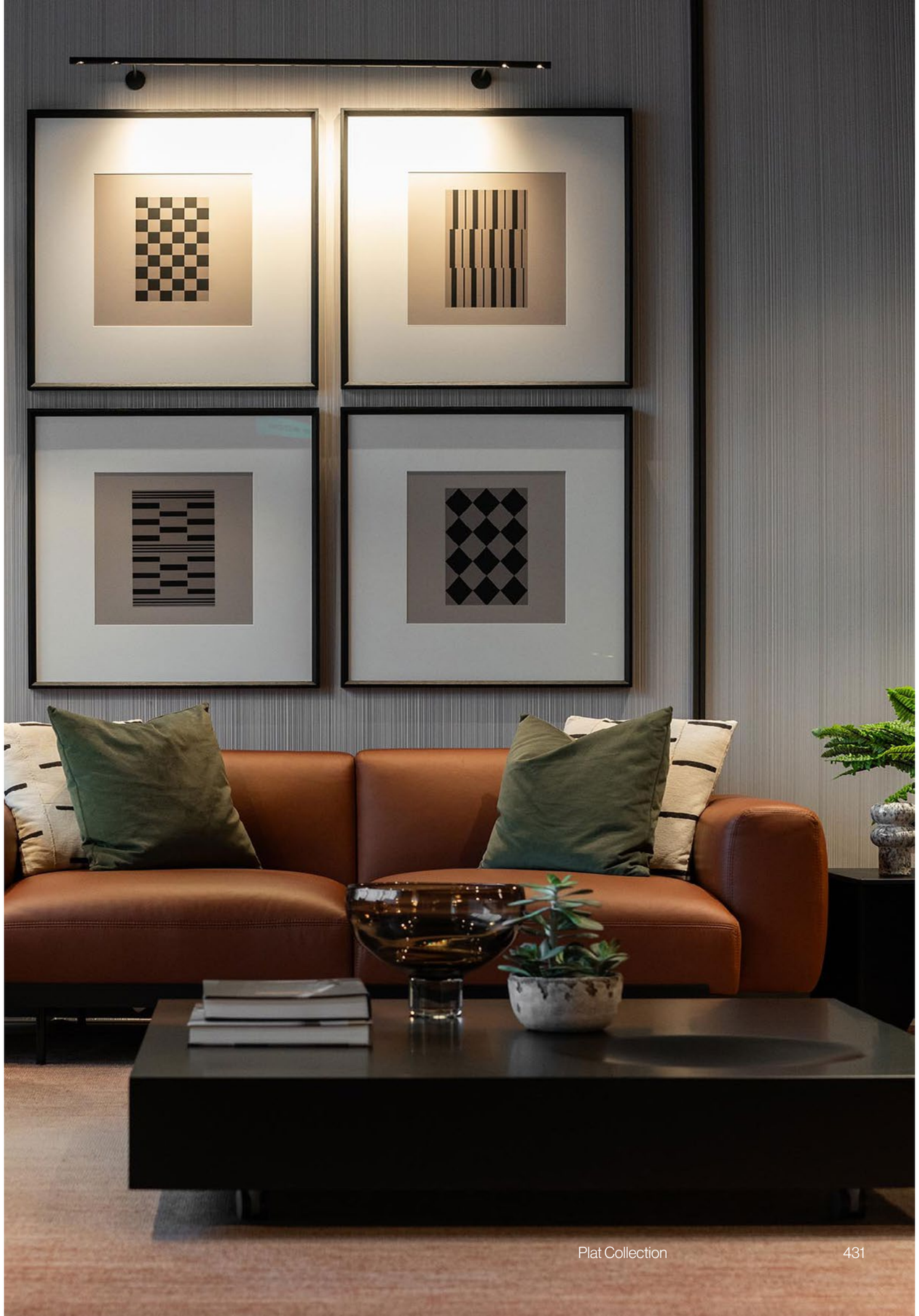

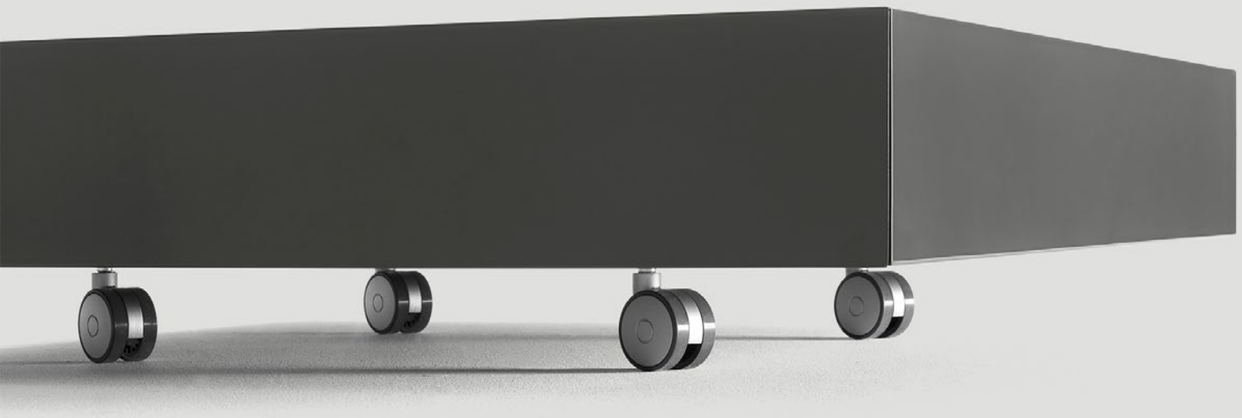

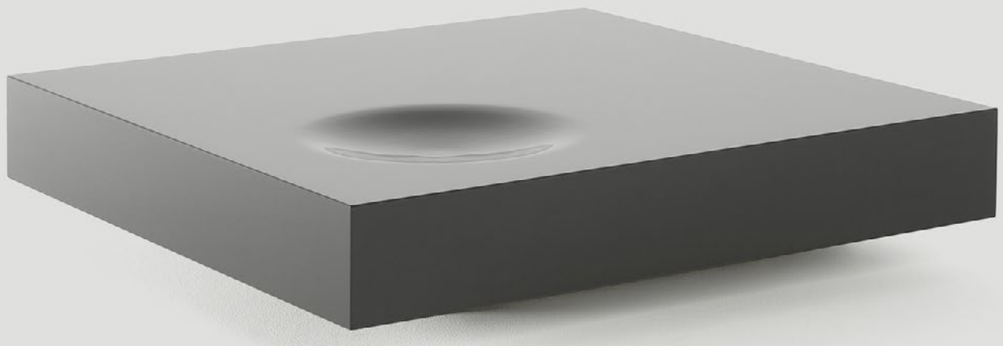

The table is made of lacquered MDF and includes a side pull-out drawer and castors, which can optionally be replaced by a plinth. The height of the table can be modified. The Plat coffee table brings a note of sympathy and coherence to any space. It is a piece that integrates easily in homes, offices and hotels.

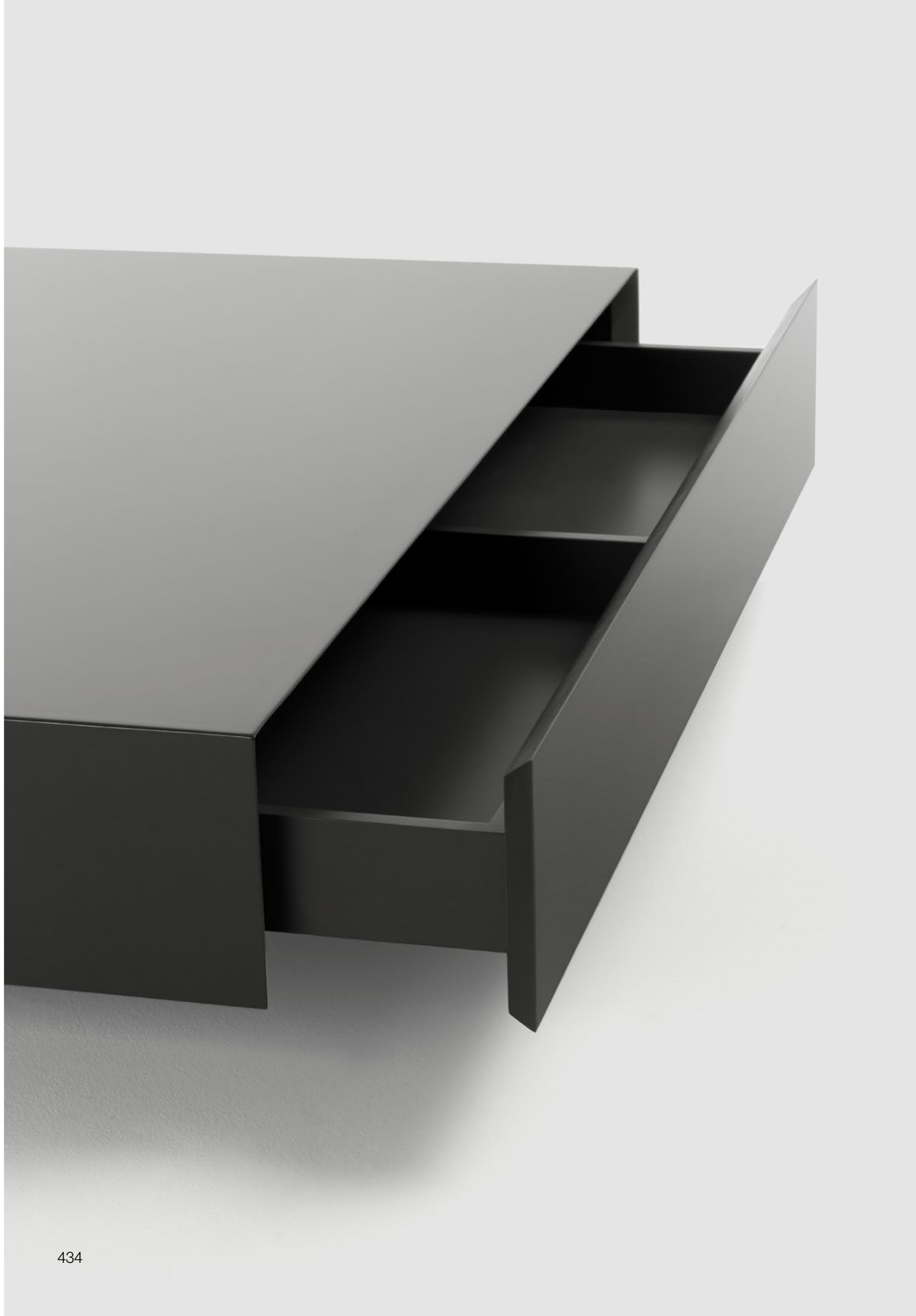

Plat coffee table 120x120x24 cm in graphite lacquer | Plat coffee table 160x70x24 cm in graphite lacquer.

Locke at Broken Wharf, Millennium Bridge - Grzywinski+Pons. London, England.

PLAT-00

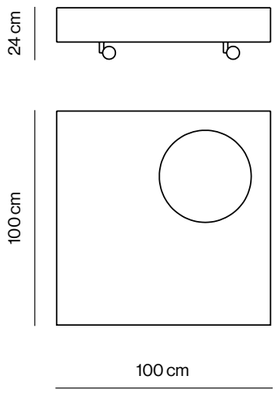

PLAT-22

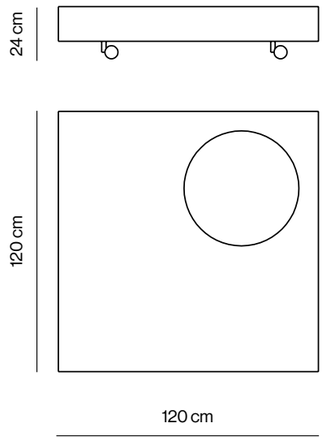

On this page, Plat coffee table with base option.

PLAT-27

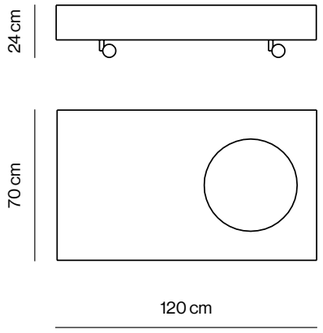

PLAT-67

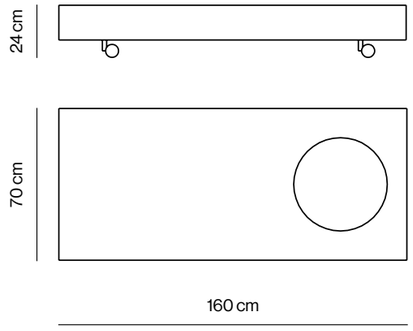

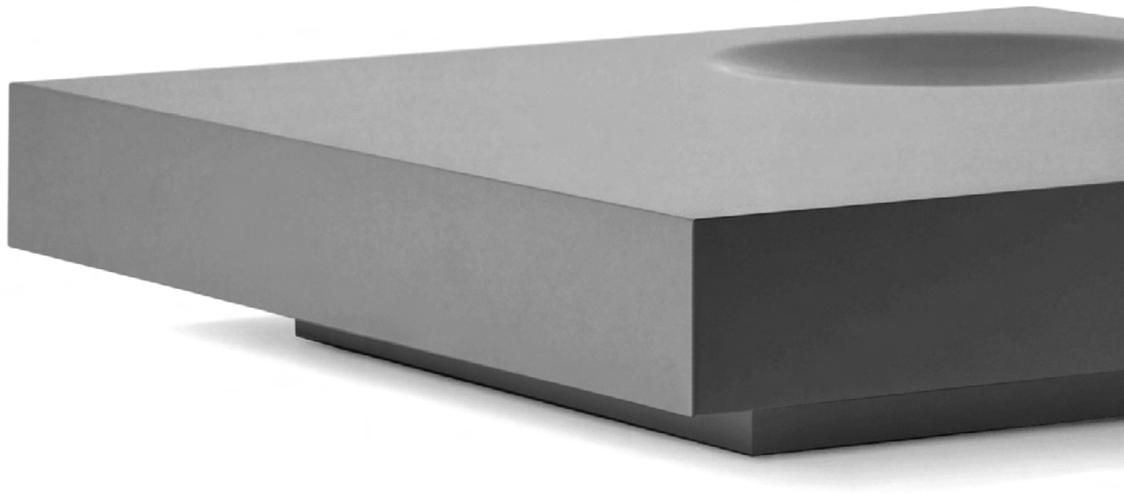

VILLA COLLECTION

Villa concept

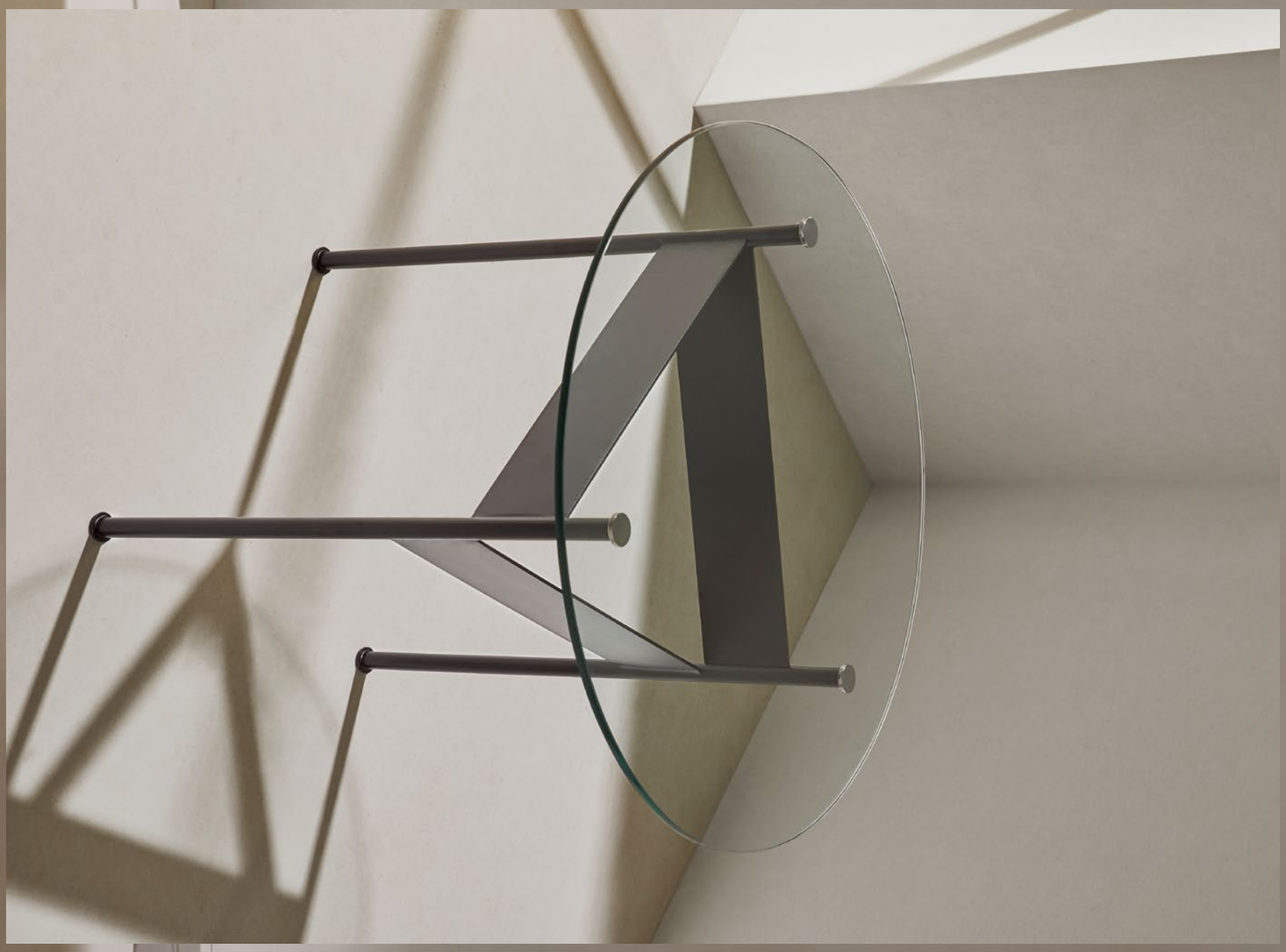

Villa collection designed by OrtegaGuijarro generates a different visual play transmitting an elegance that raises the level of any space. Villa is born with an aesthetic balance through shapes, achieving a particular beauty. The enveloping shape of its legs and its poetic transparency make it a design that generates a unique visual effect that fills any room with originality and good taste.

Transparent glass | Smoked grey glass top

On this page, Villa table Ø45x55 cm with smoked grey glass top and Villa table Ø55x50 cm with transparent glass top.

Smoked glass top

Villa coffee table Ø100x38 cm with transparent glass and micro-textured black thermo-lacquered structure.

Villa coffee table Ø70x45 cm with smoked grey glass and micro-textured black thermo-lacquered structure.

The essence of the Villa coffee table is its metallic structure in black thermo-lacquered lacquer, stripes that intertwine between its legs giving the sensation of wanting to embrace each one of them.

On this page, Villa table Ø55x50 cm and Villa table Ø45x55 cm with smoked grey glass top .

On these pages, Villa side table Ø45x55 cm
with smoked grey glass.

VIL-55

VIL-74

VIL-45

Villa collection is elegance and aesthetic balance. It offers a wide variety of finishes so you can personalise it to your taste.

VIL-45

VIL-55

VIL-74

VIL-03

VIL-45

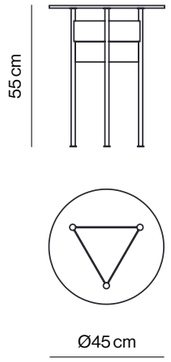

VIL-55

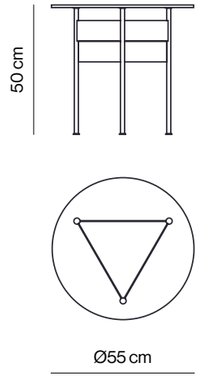

VIL-74

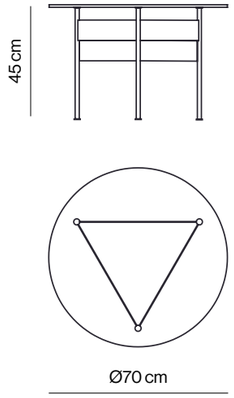

VIL-03

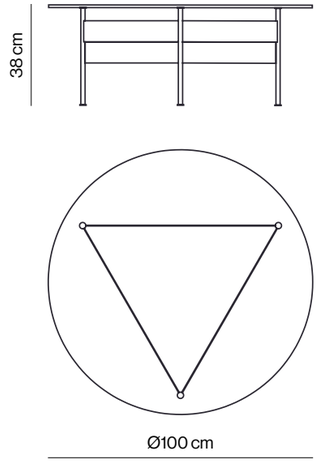

CLIK COLLECTION

Clik is a collection of coffee and side tables designed by Mario Ruiz for use in contract and residential spaces. The collection stands out for having a metal structure that acts as a link between the base and the top, achieving an original and balanced solution.

Clik collection is the perfect example of the variety of good design. Its elegant design allows the finishes of the top, base of the top, structure and base to be fully customised, allowing the user to perfectly adjust the table so that it blends in perfectly with its surroundings. Clik is a veritable universe of design possibilities.

Clik coffee table Ø100 cm in black lacquer with ash oak top.

On the left page, Clik table Ø70 cm in slate lacquer with ash oak top and Clik Lite table Ø50 cm in slate lacquer with light oak top.

Its slender legs house a magazine rack that brings greater aesthetics and practicality to the collection, which finds its extension in the Clik Lite, a lighter version that reveals the perfect union of the structure in the centre, creating a magnificent visual effect that brings elegance to the environment.

Clik Lite table Ø100 cm with black glass top and Clik Lite table Ø50 cm with ash oak top.

Walsh Street, South Yarra III - Le Loft. Melbourne, Australia.

Clik Lite coffee table Ø70 cm in stone lacquer with natural oak top.

Clik Lite is a collection of coffee and side tables for use in contract and residential spaces. The collection stands out for its original and balanced structure that allows it to adapt easily to any environment.

On the left page, Hotel Garbi Ibiza & Spa - Espai 31. Ibiza, Spain.

Clik and Clik Lite are the perfect choice when it comes to transmitting the purest values of design, as its adaptation to the environment makes it a unique and indispensable element that undoubtedly gives a feeling of harmony, tranquillity and calm.

CLIK-77RB

CLIK-55RC

CLIK-00RB

CLIK-55RB

The wide variety of finishes allows total personalisation of the table to the designed space. The shape of its legs as well as the subtle support of the top generate a unique effect of simplicity, elegance and lightness that allows to play with other constituent elements of the environment to give a timeless touch to the room.

CLIK-55RB

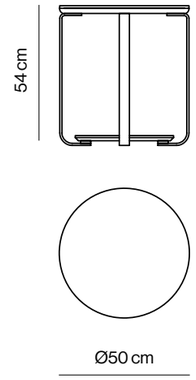

CLIK-77RB

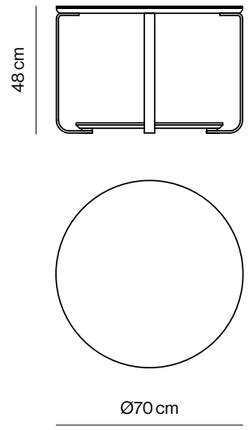

CLIK-00RB

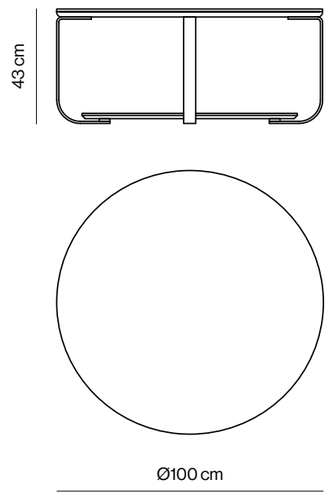

CLIK-55RC

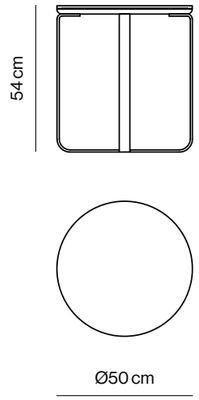

CLIK-77RC

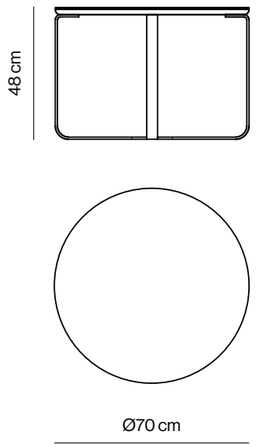

CLIK-00RC

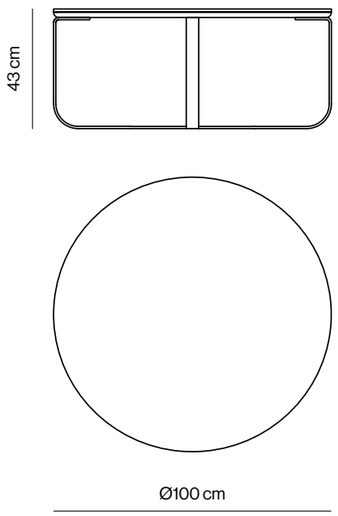

The top is available in different materials such as oak veneer, black glass and MDF lacquered in all colours. The metal structure with four legs connected in a cross shape marks its identity together with the different pieces that compose it.

VERA COLLECTION

Vera is a coffee table designed by Serafín Redondo with a characteristic volume, where it is possible to combine the lacquer of its exterior finish with different finishes in the interior recesses. Vera coffee table brings elegance and coherence to any space. It is a piece that integrates easily both at home and in offices and hotels.

On these pages, Vera coffee table 120x120x32 cm in white lacquer and natural walnut.

Vera is the perfect example of adaptable furniture that blends in with its surroundings. Perfect for large spaces where you can develop all your faculties to the maximum, this coffee table occupies a necessary volume to give meaning to the environment that surrounds it. In addition to its elegance and sobriety, it adds a touch of functionality with its interior openings.

Viewpoint of Valencia - Vicente Navarro. Valencia, Spain.

Hotel Garbi Ibiza & Spa - Espai 31. Ibiza, Spain.

VZ-00

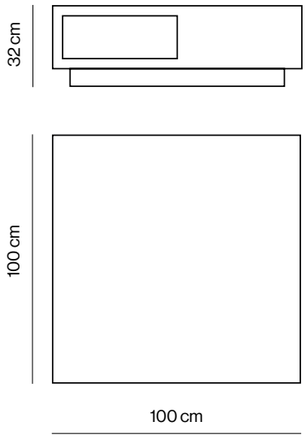

VZ-22

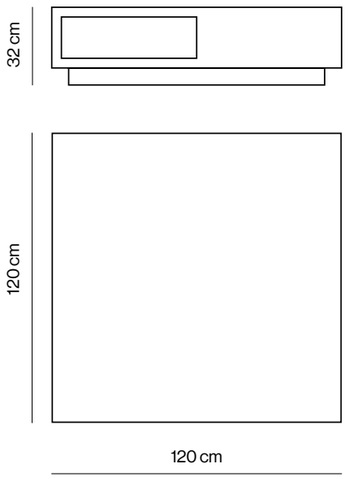

On Vera table it is possible to combine the lacquer of its exterior finish with different finishes in the interior openings, such as oak veneer, walnut or lacquer of the same or different color than the exterior.

MARÍA
COLLECTION

The work in every detail represents the stamp of its author, excellence and timelessness. Miguel Milá, a pioneer of 1950s design in Spain, has collaborated with Kendo in the re-edition of María.

The table is characterised by its lightness and transparency. Not only does it allow a full view of what is underneath, but it is also capable of highlighting and framing it.

María is a table with a strong concept that gives style to the space. Miguel Milá's design produces a visual effect that transforms the environment and mimics the piece with its surroundings.

María coffee table 105x70x37 cm with micro-textured black thermo-lacquered metal structure, transparent glass top and chromed metal legs.

María coffee table 120x90x37 cm with micro-textured black thermo-lacquered metal structure, transparent glass top and chromed metal legs.

Bolivar - Gr-os. Barcelona, Spain.

María table is made of noble materials such as chromed metal and glass. The nobility of its materials and its visual lightness achieve a piece capable of raising the level of any project.

MAR-29

MAR-07

MAR-07

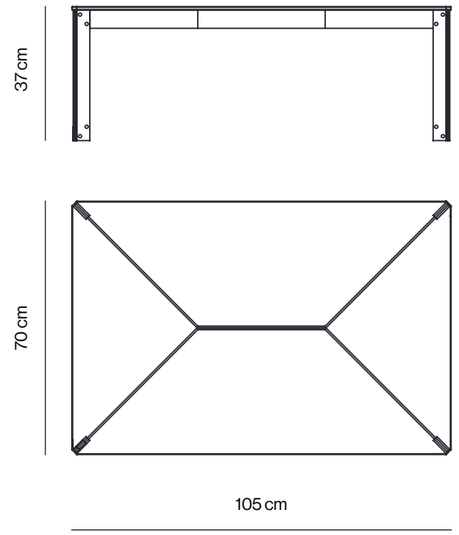

MAR-29

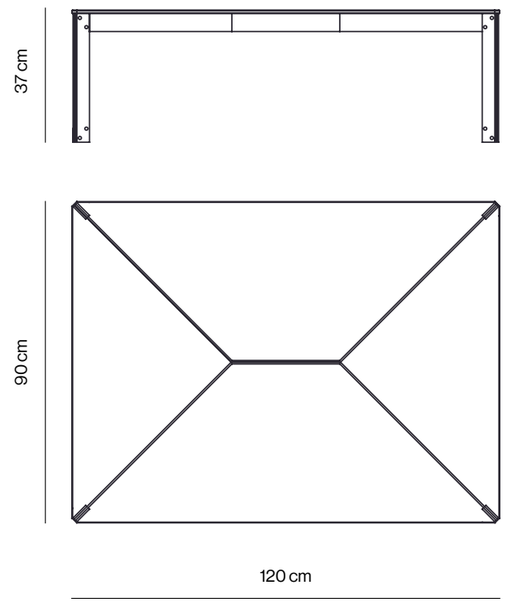

ANT COLLECTION

Its elegance and uniqueness together with the nobility of its materials place this collection desiegned by Francesc Rifé Studio at the highest level of our products. Due to its versatility, it fits both in the living room and in large rooms of the contract sector.

ANT TABLE 128x100x40 cm White marble | Graphite lacquer

Ant is a versatile table, suitable for numerous contexts and environments, always providing the distinction and elegance that characterise it, blending in with its surroundings while offering personality, design and balance.

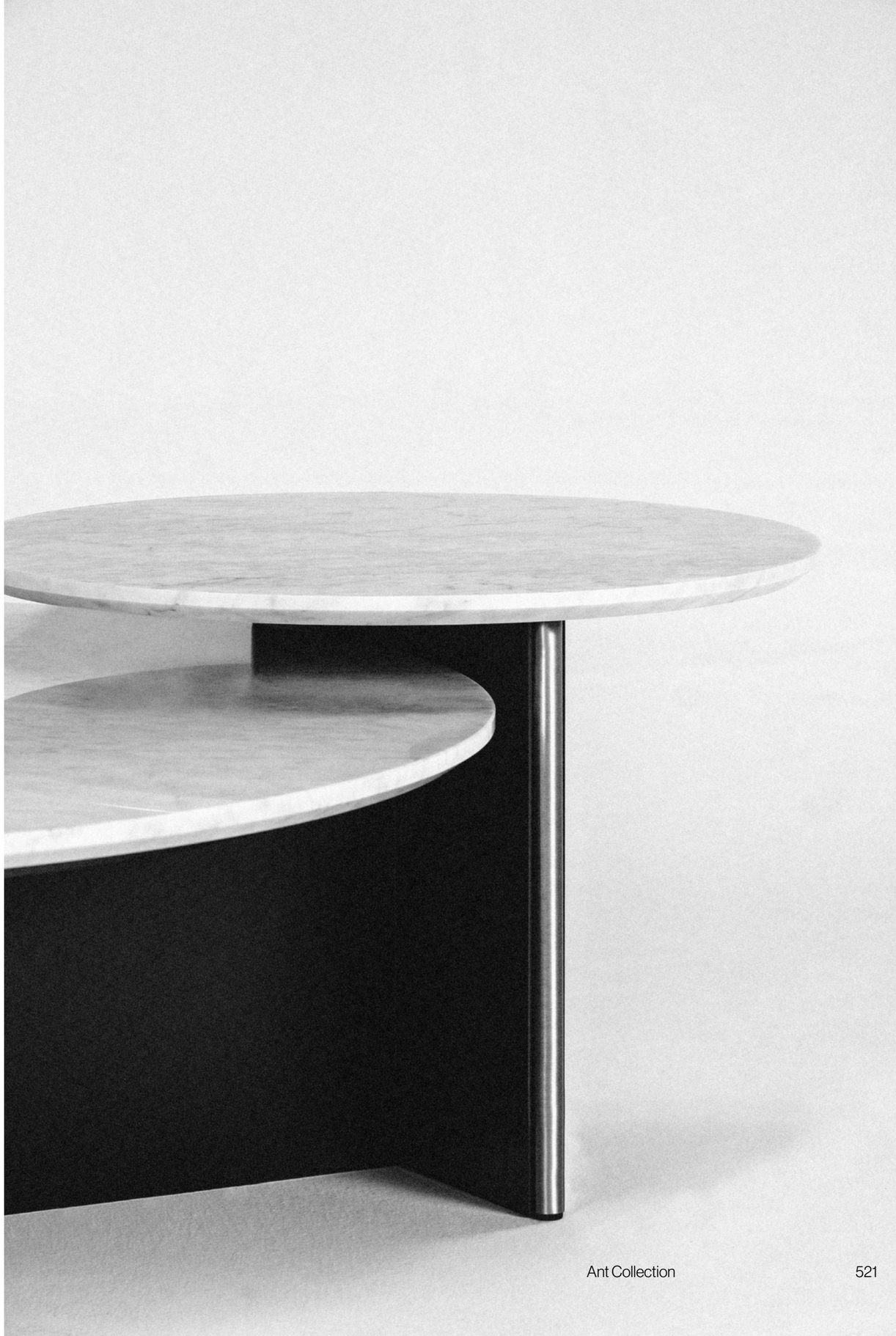

Ant Lite coffee table, an extension of Ant collection, stands out for its balance between delicacy and uniqueness. Thanks to the architecture of its base and the refinement of the marble top, it is a table that brings elegance to the room.

Ant Lite is a coffee table with a circular top in white or black marble. A practical and distinguished solution for a special interior design.

Ant Lite coffee table Ø120x38 cm in black marble and slate lacquer.

Dubai Internet City - The total Office. Dubai, United Arab Emirates.

Supreme Council for Motherhood & Childhood Office - Roar Designs. Abu Dhabi, United Arab Emirates.

Ant and Ant Lite collections are the perfect example of an elegant and timeless table. Whether in the original Ant format or in the classic and sober simplicity of Ant Lite, these collections are destined to add unique value and make the environment a unique and exclusive setting.

The interplay of the marble with the structure of the table and the metal profile creates an unforgettable aesthetic appeal that expresses the quality and sobriety of a unique design. In addition, the flying effect of the top gives it the sensation of lightness and harmony that is exclusive to a work that is destined to play a leading role in any environment.

ANT-20

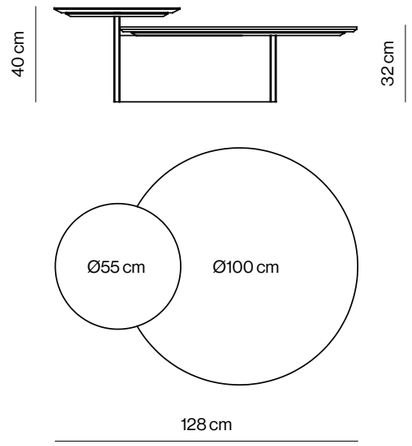

ANT-42

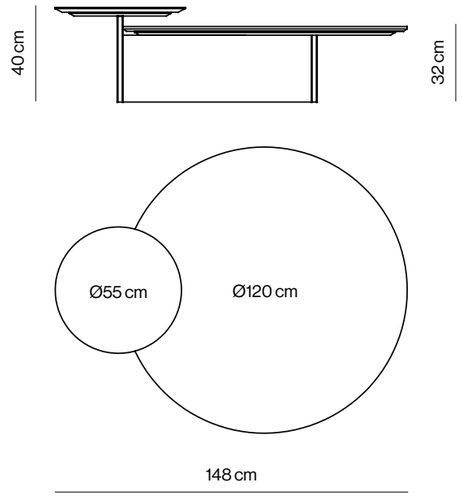

ANT-03

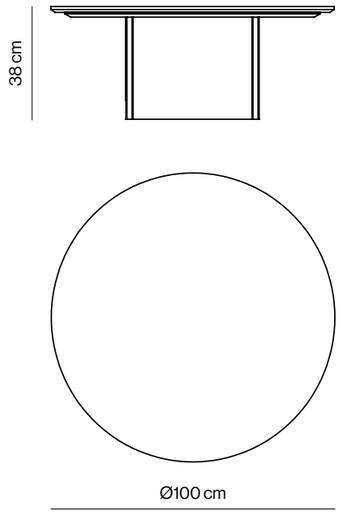

ANT-23

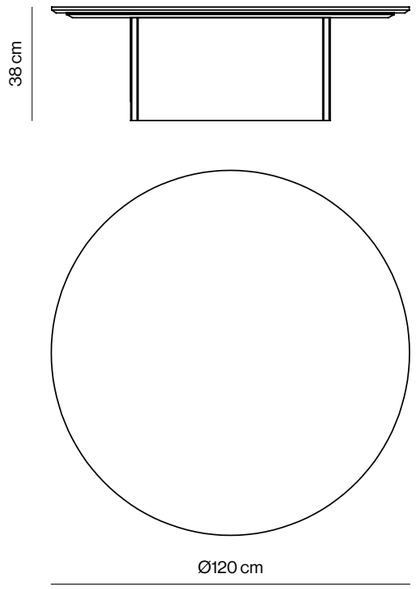

Ant and Ant Lite offer a wide variety of finishes that allows them to be customised to the user's taste. Its marble tops together with the metal profile finished in brass and the immense variety of lacquers for the structure offer numerous options for all areas.

AXIL
COLLECTION

Axil designed by Serafín Redondo has become a reference piece in our trajectory. It surprises by its marked volume and the exquisite craftsmanship of the details in its construction. With its variety of finishes and elegant design, it is an indispensable piece for any space.

On this page, Axil console in natural oak finish.

On these pages, Axil console
135x40x75 cm in natural oak finish.

Axil is a very practical and original solution, with a drawer integrated in the lower part of the unit to facilitate the storage of elements inside. Thanks to the naturalness of its finishes, it brings warmth to the room.

On these pages, Axil console
135x40x75 cm in ash oak finish.

It is a console table veneered in oak. A very practical and original solution that thanks to the naturalness of its finishes brings warmth to the room. It has an integrated drawer at the bottom to facilitate the storage of items inside.

XY-34

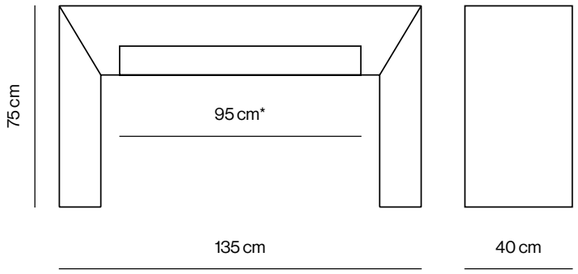

*drawer's inner room: 88x25x6 cm

XY-54

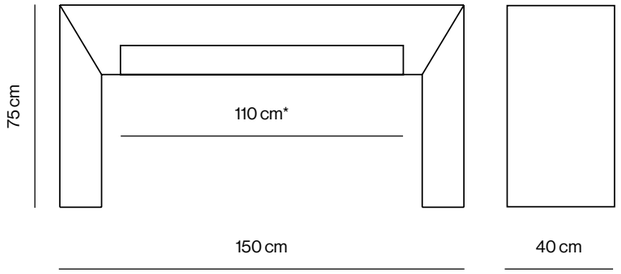

*drawer's inner room: 102x25x6 cm

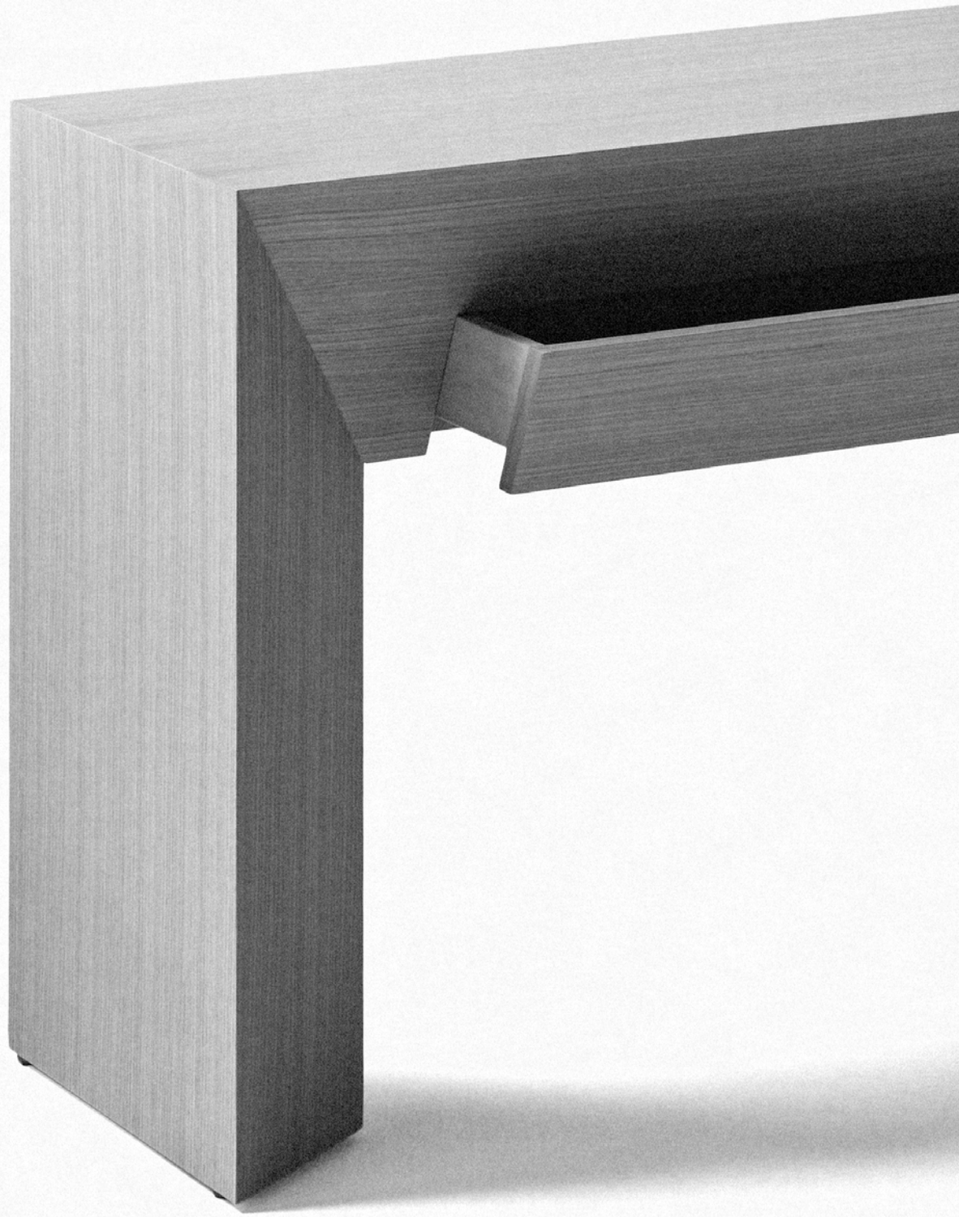

MIKA
COLLECTION

Mika concept

Collection of tables that stands out for its combination of materials and finishes on the tops to achieve unique pieces. Mika table designed by Yembarastudio is a perfect balance between functionality and uniqueness, allowing it to adapt to numerous environments and architectural design spaces.

The option of creating customised sets with noble materials makes it possible to easily adapt to the needs of any project. On the left page, Mika table 120x45x45 cm in taupe lacquer and ash oak.

Mika table 120x45x45 cm and Mika table 72x45x52 cm in fog lacquer and natural oak.

Mika table 120x45x45 cm in fir lacquer and natural walnut.

The side table is based on the design of its tubular metal structure, generating two heights and a visual play from different perspectives.

On these pages, Mika table 72x45x52 cm in fir lacquer and natural oak.

MIK-74

MIK-24

MIK-74

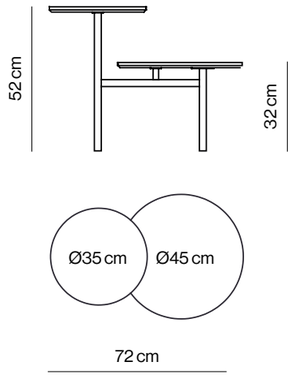

MIK-24

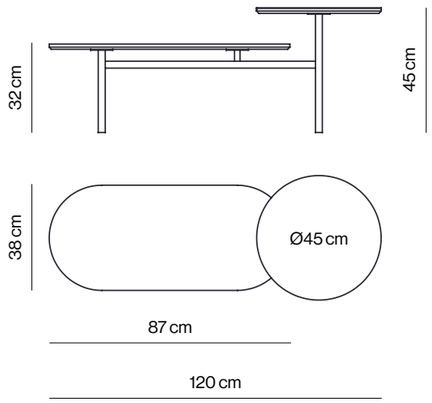

It offers a wide variety of materials and finishes on the tops such as walnut, oak and lacquer, which provides a great versatility to adapt the table to homes, hotels and offices.

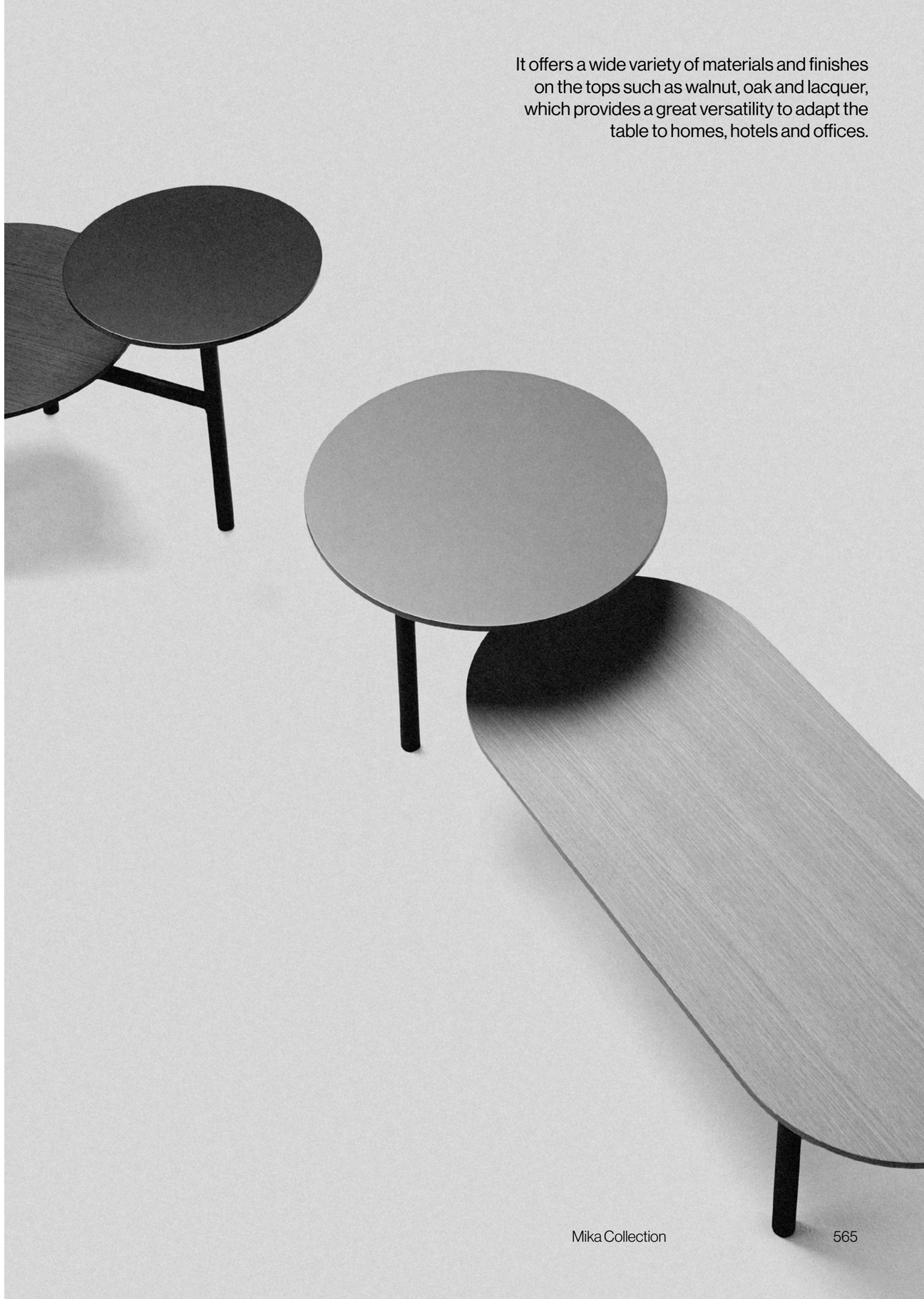

TRIA
COLLECTION

Because of its uniqueness, Tria table designed by PerezOchando has become an iconic piece in our collection. Its careful design together with the wide range of colours of its finish make the table a unique object that will make us fall in love with its freshness and style.

On the right page, Tria table Ø50x50 cm in stone lacquer.

Eaglemont Refurb & Landscape - Bent Architecture. Melbourne, Australia.

Tria is a table with apparently simple lines, but with a very interesting visual play thanks to the cavity formed by joining the three metal plates creating an original triangular silhouette that gives shape to the table.

On the left page, Tria table Ø50x50 cm in micro-textured black thermo-lacquered finish.

Its original design generates the visual effect of the legs being an extension of the table top itself, turning its silhouette into a unique piece that also offers numerous possibilities thanks to its large number of finishes and the combination with other tables, both the same and different.

On the right page, Tria tables in graphite and sand lacquer.

Side table made of black or white microtextured thermo-lacquered metal or lacquered in any color. A very light and original solution for a different project.

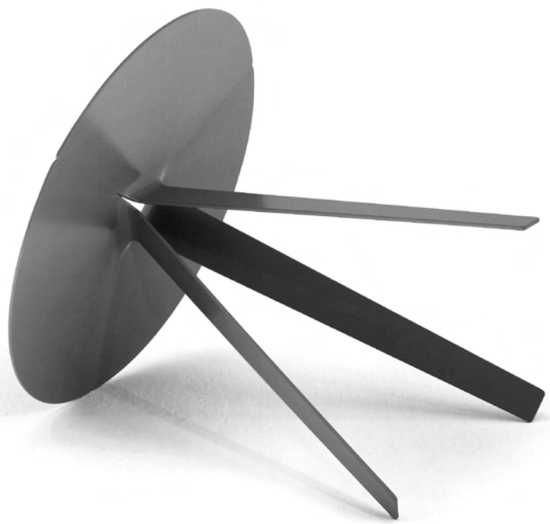

TRIA-55R

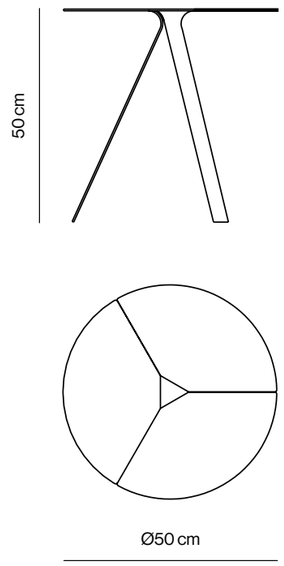

kendo

Kendo mobiliario, s.l.

Gibraltar, 8
46930 Quart de Poblet
Valencia (Spain)
(T) +34 96 153 03 30
comercial@kendomobiliario.com
export@kendomobiliario.com
www.kendomobiliario.com

FSC www.fsc.org FSC® C179903 The mark of responsible forestry

PEFC PEFC/14-35-00596 www.pefc.es

artesania comunitat valenciana

ISO 9001 BUREAU VERITAS Certification

ISO 14001 BUREAU VERITAS Certification

Consulte nuestros productos certificados FSC® y PEFC

Unión Europea
Fondo Europeo de Desarrollo Regional
"Una manera de hacer Europa"

GENERALITAT VALENCIANA

IVACE INSTITUTO VALENCIANO DE COMPETITIVIDAD EMPRESARIAL

© Kendo mobiliario, s.l. 2025